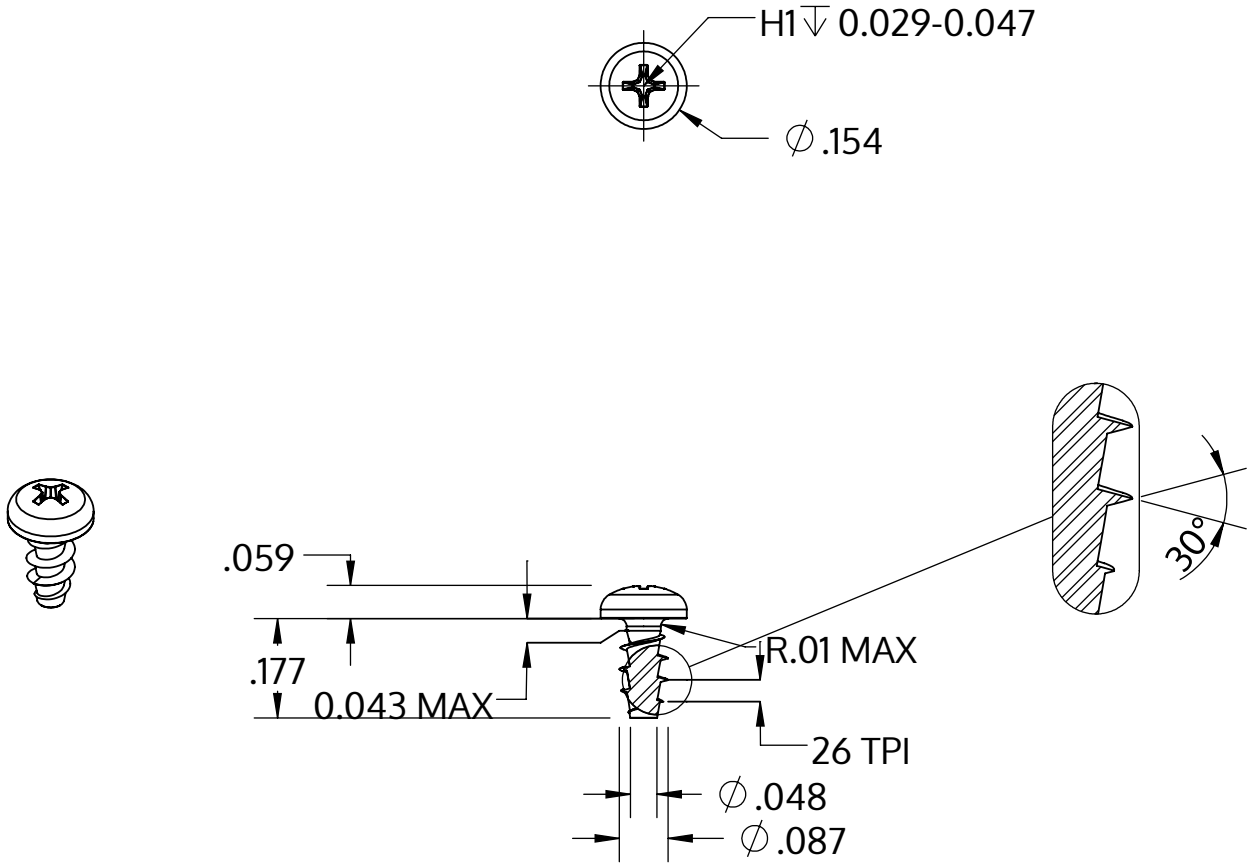

Metric size	M2.2 x 0.98 mm
US size (converted)	#0.086-26
	Tolerances [inch]
Length	+/- 0.014
Head diameter	+0 / -0.011
Head height	+/- 0.004
Thread diameter	+0.005 / -0

Descriere	STP32A 2.2x4.5 - H1
Material	oțel, călit
Exterior	zincat 5-7 µm, recopt, pasivat transparent/albastru
Greutate	0.161 kg / 1000 unități

SCREWERK	**STP32A0220045S**	
_Zoll Zeichnung Größe A	Scalarea 3:1	2024-10