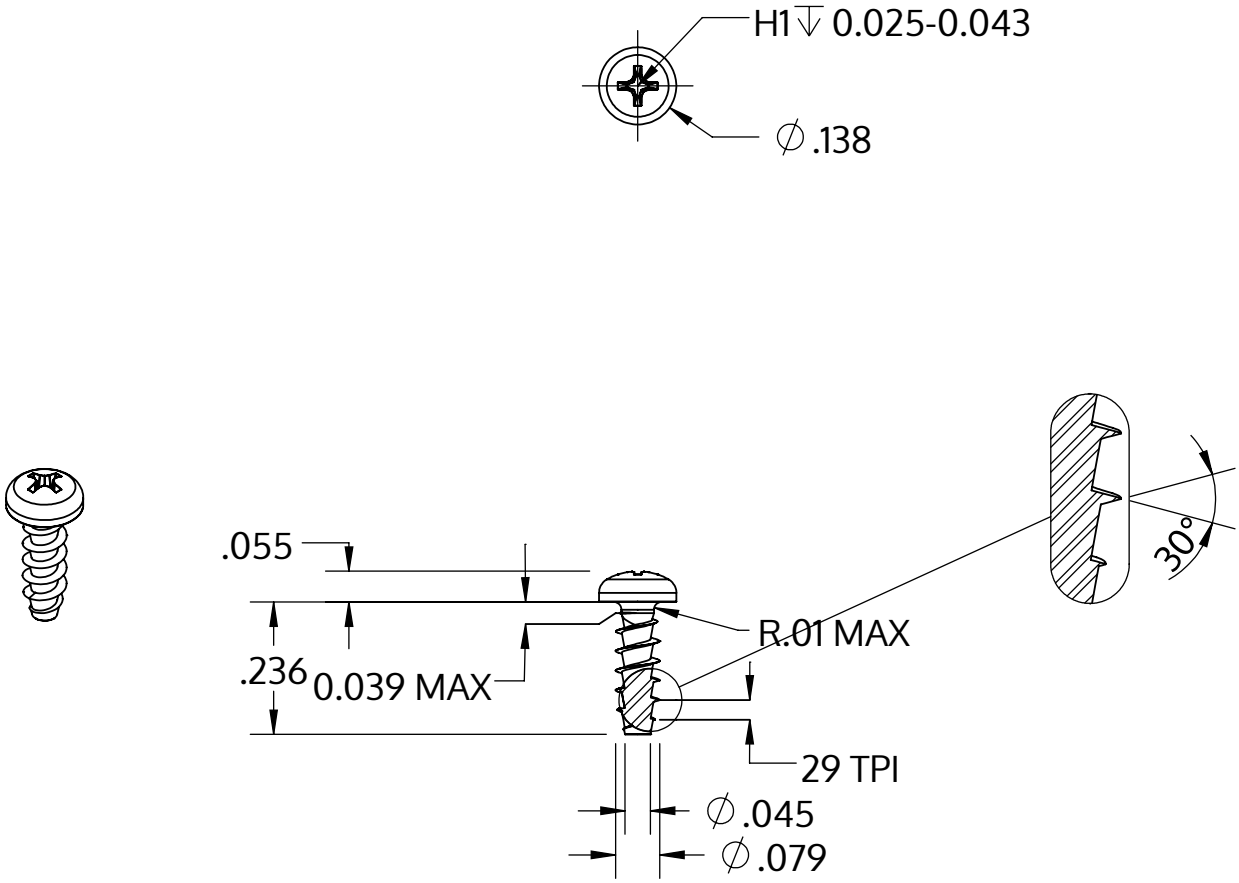

Metric size	M2 x 0.89 mm
US size (converted)	#1.5-29
	Tolerances [inch]
Length	+/- 0.014
Head diameter	+0 / -0.011
Head height	+/- 0.004
Thread diameter	+0.005 / -0

Descriere	STP32A 2.0x6.0 - H1
Material	oţel inoxidabil A2
Exterior	neacoperit, murat și pasivat
Greutate	0.144 kg / 1000 unități

SCREWERK	**STP32A0200060E**	
_Zoll Zeichnung Größe A	Scalarea 3:1	2024-10