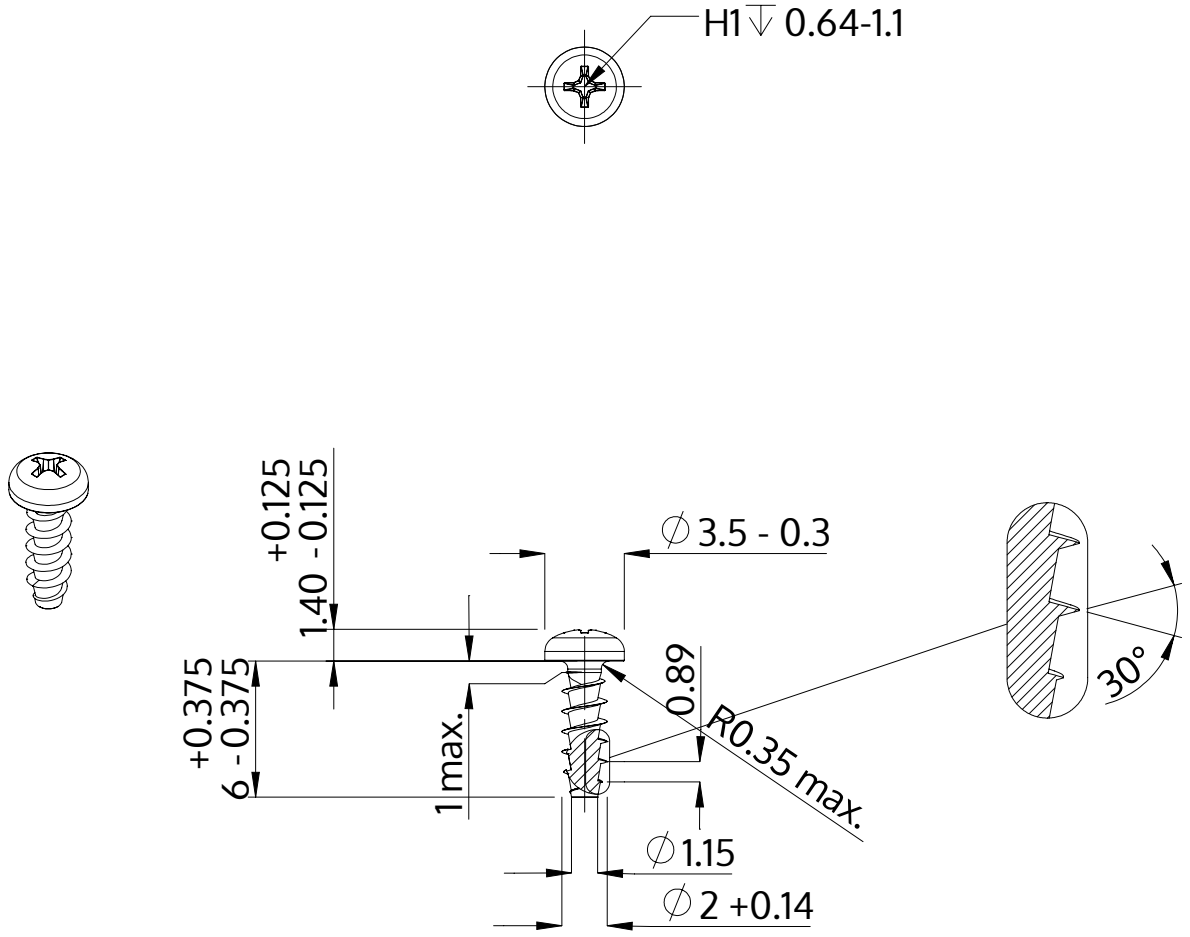


| | |
|---|---|
| Description | STP32A 2.0x6.0 - H1 |
| Material | steel, hardened |
| Surface | Zinc-Nickel-plated min. 5µm, passivated black/ Cr-VI-free, baked, sealed |
| Weight | 0.144 kg / 1000 pieces |

| | | |
|---|---|---|
| SCREWERK | **STP32A0200060B** | |
| Metric Drawing A4 | Scale 3:1 | 2024-10 |