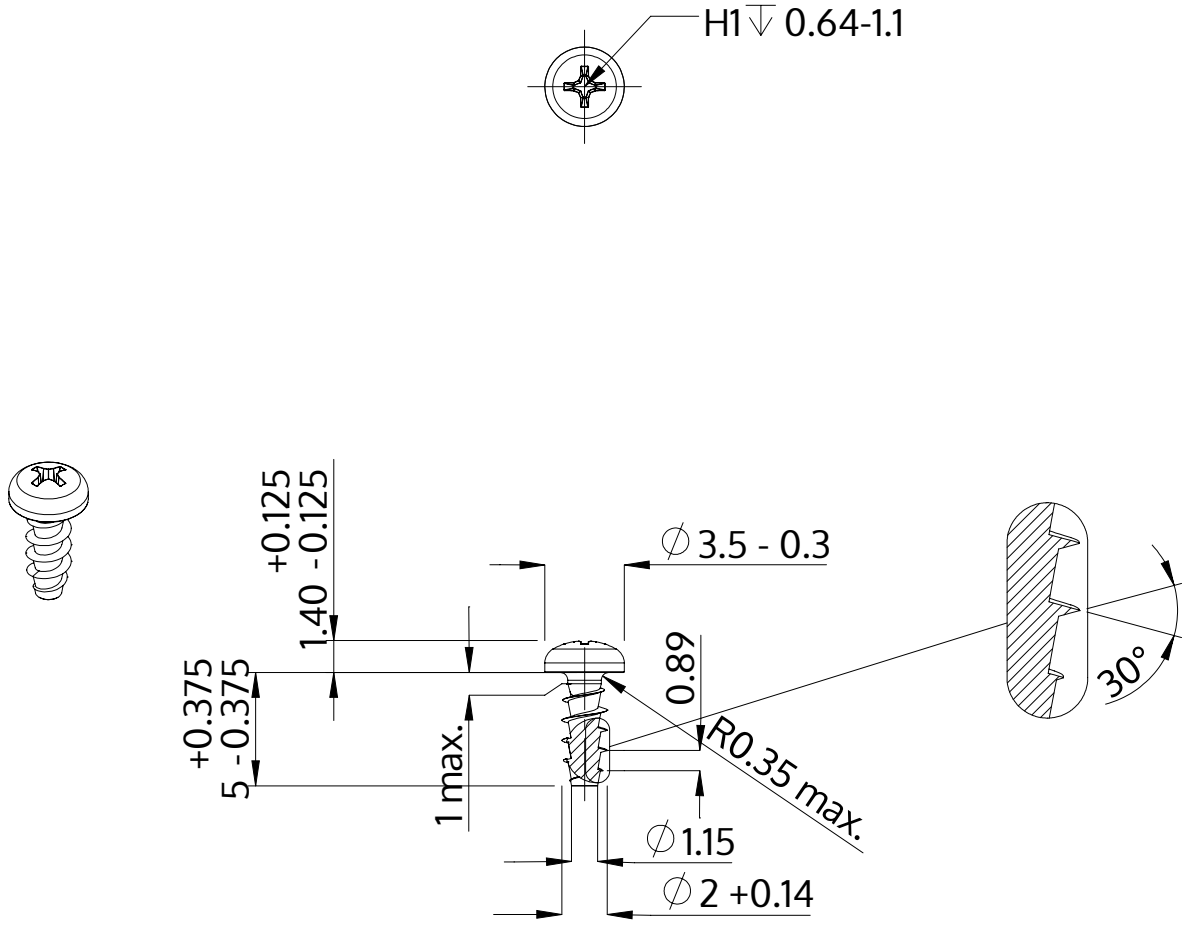

Description	STP32A 2.0x5.0 - H1
Material	steel, hardened
Surface	zinc-plated 5-7 µm, baked, blue / transparent passivated
Weight	0.129 kg / 1000 pieces

SCREWERK	**STP32A0200050S**	
Metric Drawing A4	Scale 3:1	2024-10