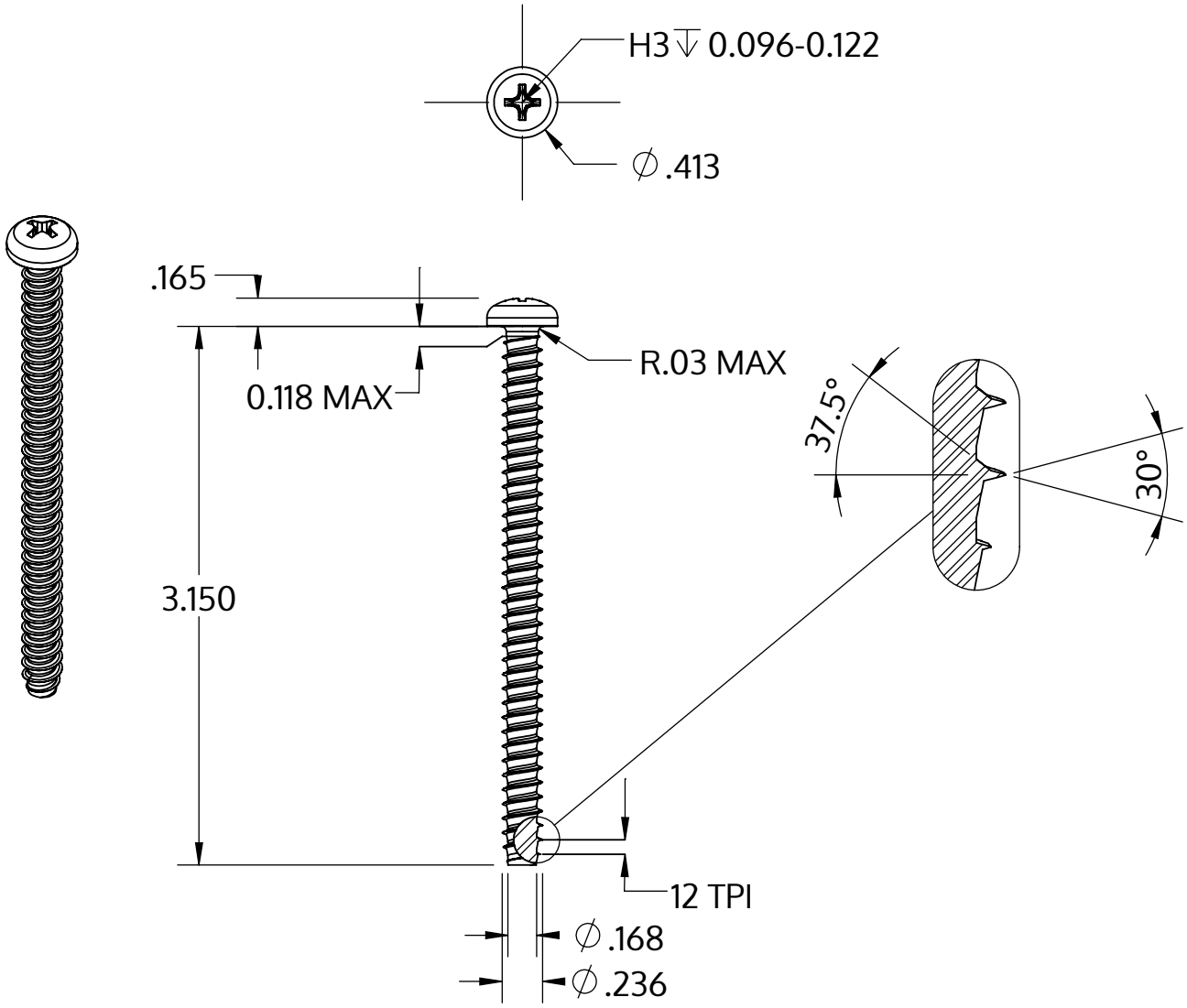

Metric size	M6 x 2.14 mm
US size (converted)	#0.236-12
	Tolerances [inch]
Length	+/- 0.037
Head diameter	+0 / -0.016
Head height	+/- 0.005
Thread diameter	+0.005 / -0

Description	STP32 6.0x80.0 - H3
Matière	acier inoxydable A2
Surface	brillant décapé et passivé
Poids	12.735 kg / 1000 Unité

SCREWERK	**STP320600800E**	
_Zoll Zeichnung Größe A	Redimensionner 1:1	2024-10