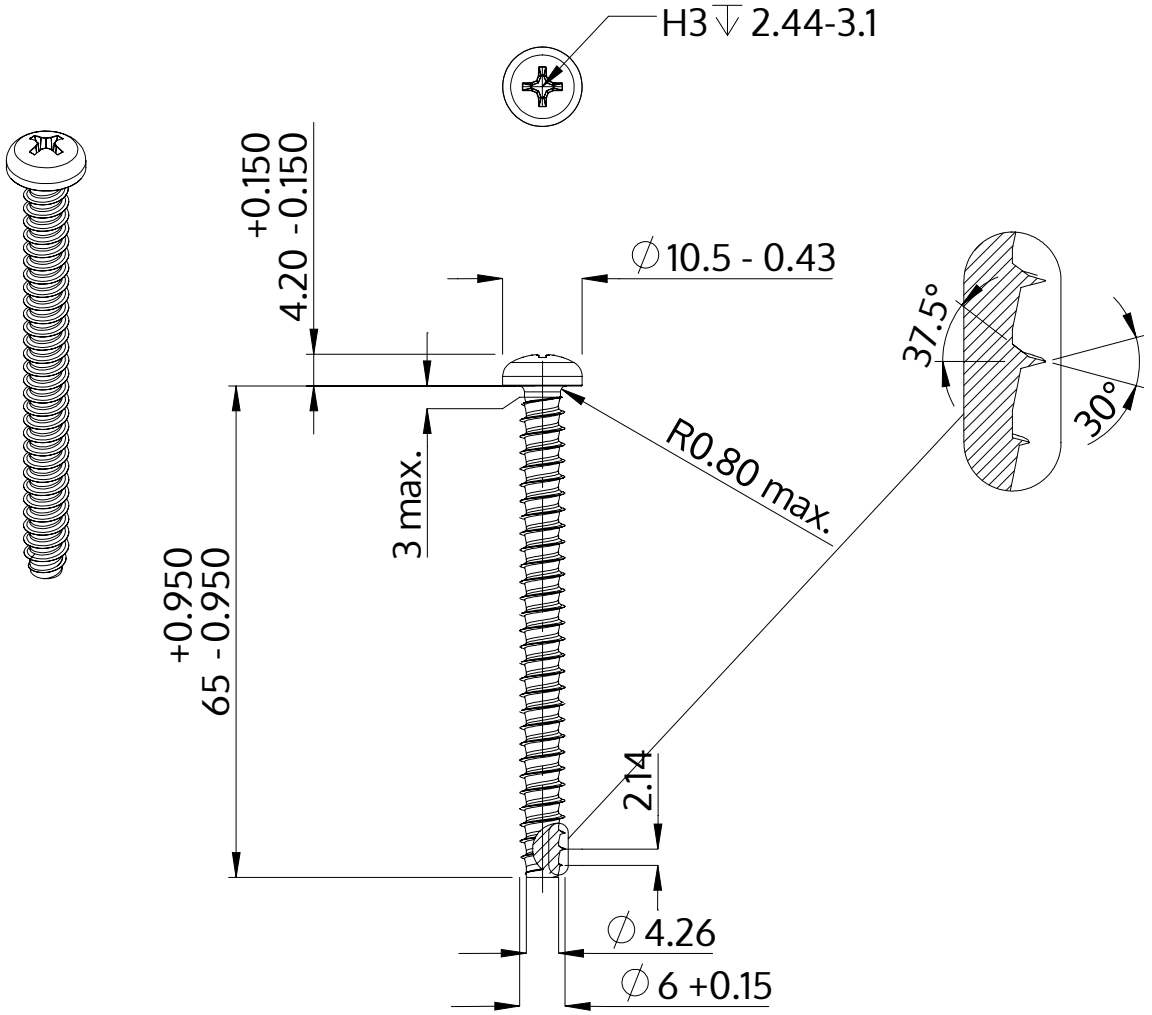

Description	STP32 6.0x65.0 - H3
Material	steel, hardened
Surface	zinc-plated 5-7 µm, baked, blue / transparent passivated
Weight	10.700 kg / 1000 pieces

SCREWERK	**STP320600650S**	
Metric Drawing A4	Scale 1:1	2024-10