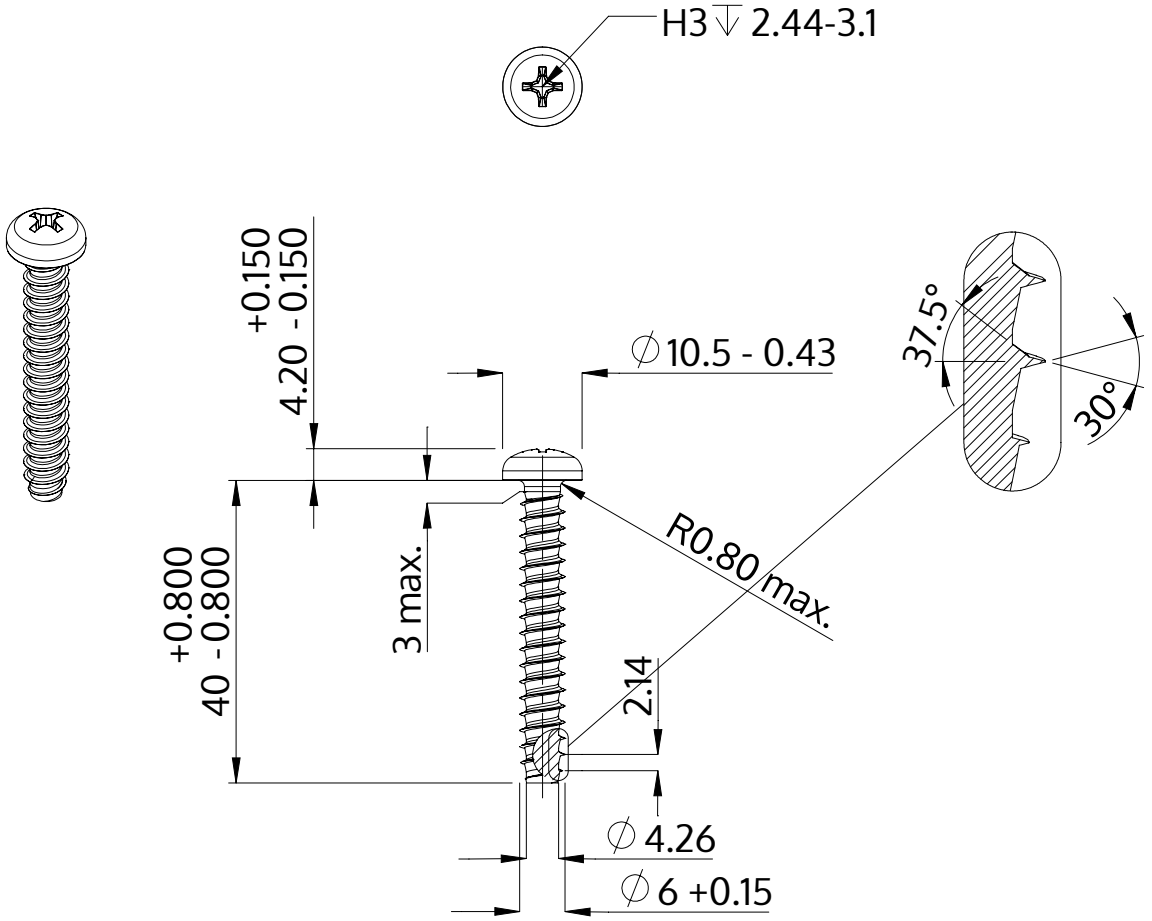

Description	STP32 6.0x40.0 - H3
Material	stainless steel A4
Surface	bright, pickled and passivated
Weight	7.309 kg / 1000 pieces

SCREWERK	**STP320600400C**	
Metric Drawing A4	Scale 1:1	2024-10