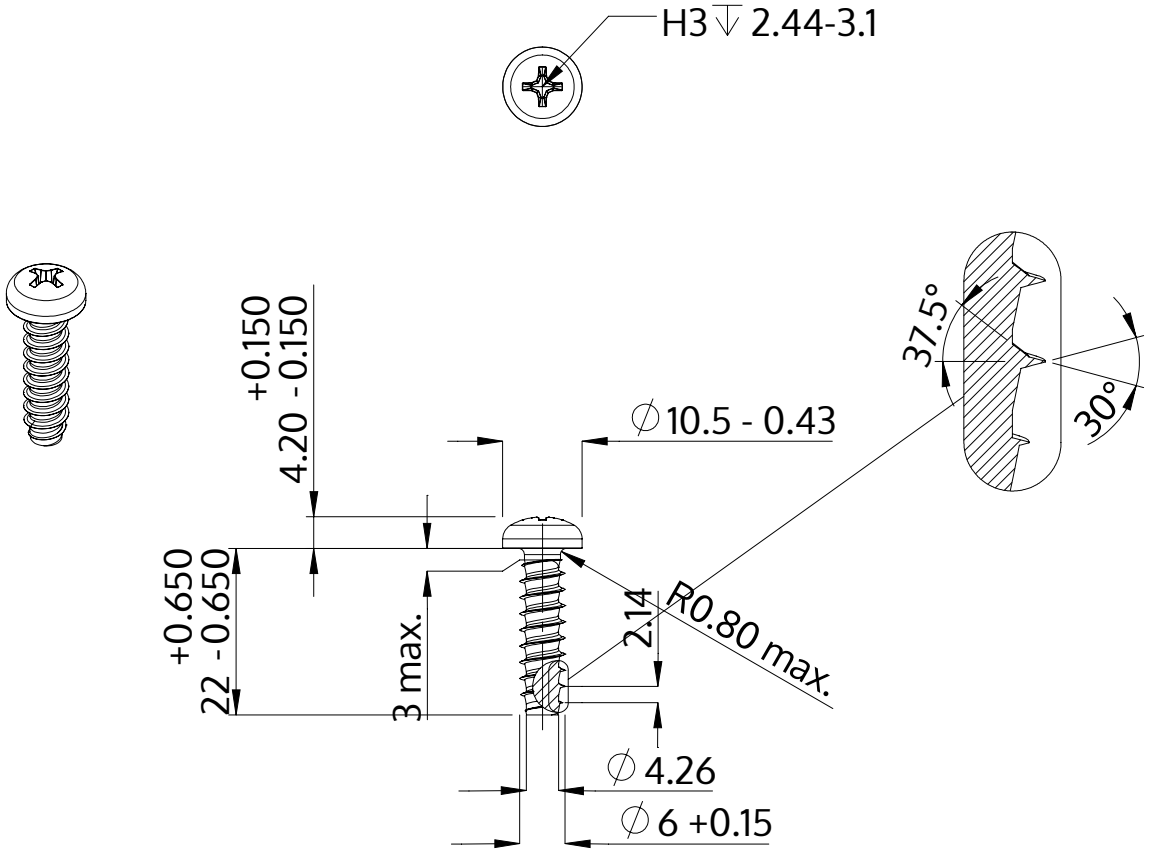

Description	STP32 6.0x22.0 - H3
Material	steel, hardened
Surface	zinc-plated 5-7 µm, baked, blue / transparent passivated
Weight	4.868 kg / 1000 pieces

SCREWERK	**STP320600220S**	
Metric Drawing A4	Scale 1:1	2024-10