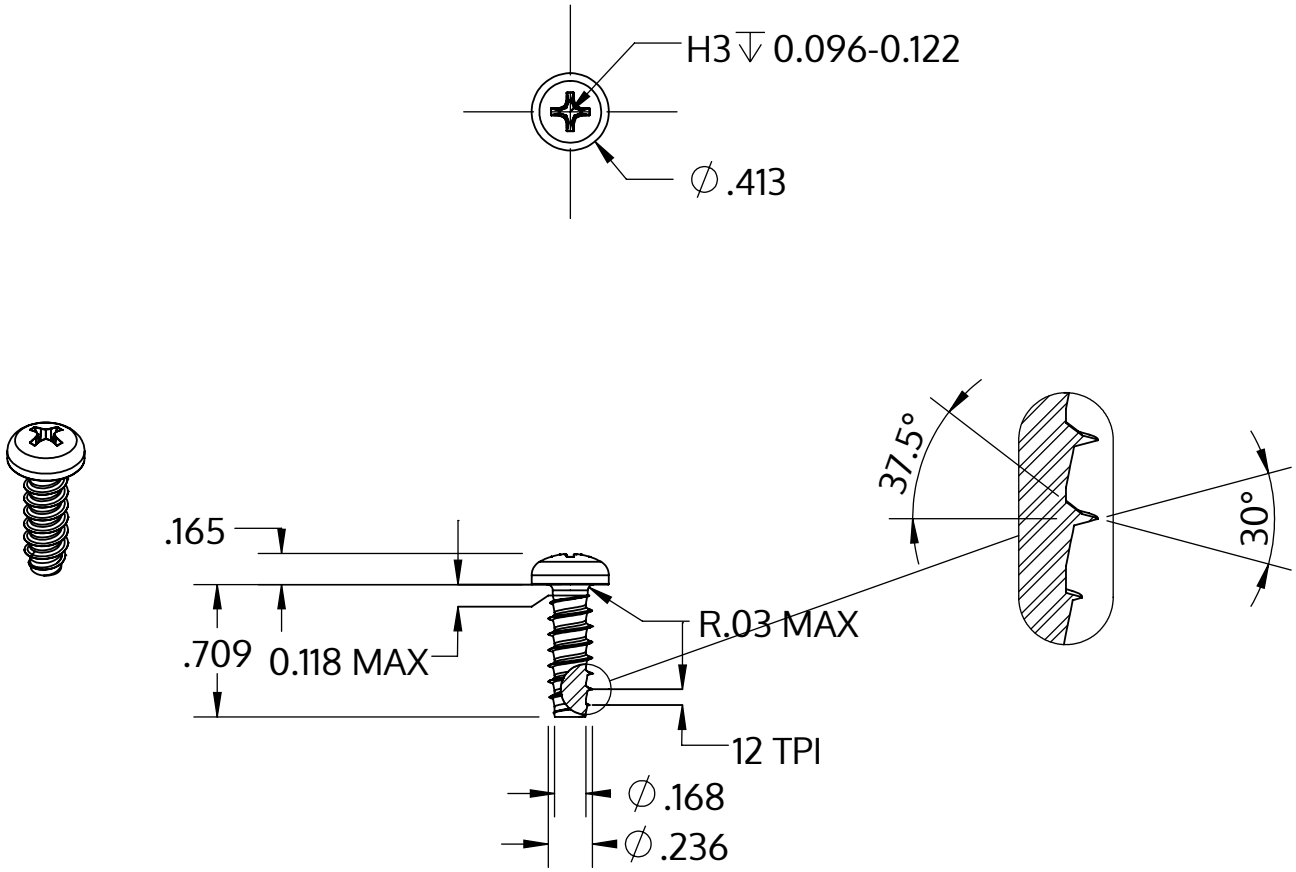


| | |
|---|---|
| Metric size | M6 x 2.14 mm |
| US size (converted) | #0.236-12 |
| | Tolerances [inch] |
| Length | +/- 0.021 |
| Head diameter | +0 / -0.016 |
| Head height | +/- 0.005 |
| Thread diameter | +0.005 / -0 |

| | |
|---|---|
| Descrizione | STP32 6.0x18.0 - H3 |
| Materiale | acciaio, temprato |
| Superficie | Placcato Zinco-Nichel, passivato nero, ricotto, sigillato |
| Peso | 4.325 kg / 1000 pezzi |

| | | |
|---|---|---|
| SCREWERK | **STP320600180B** | |
| _Zoll Zeichnung Größe A | Scala 1:1 | 2024-10 |