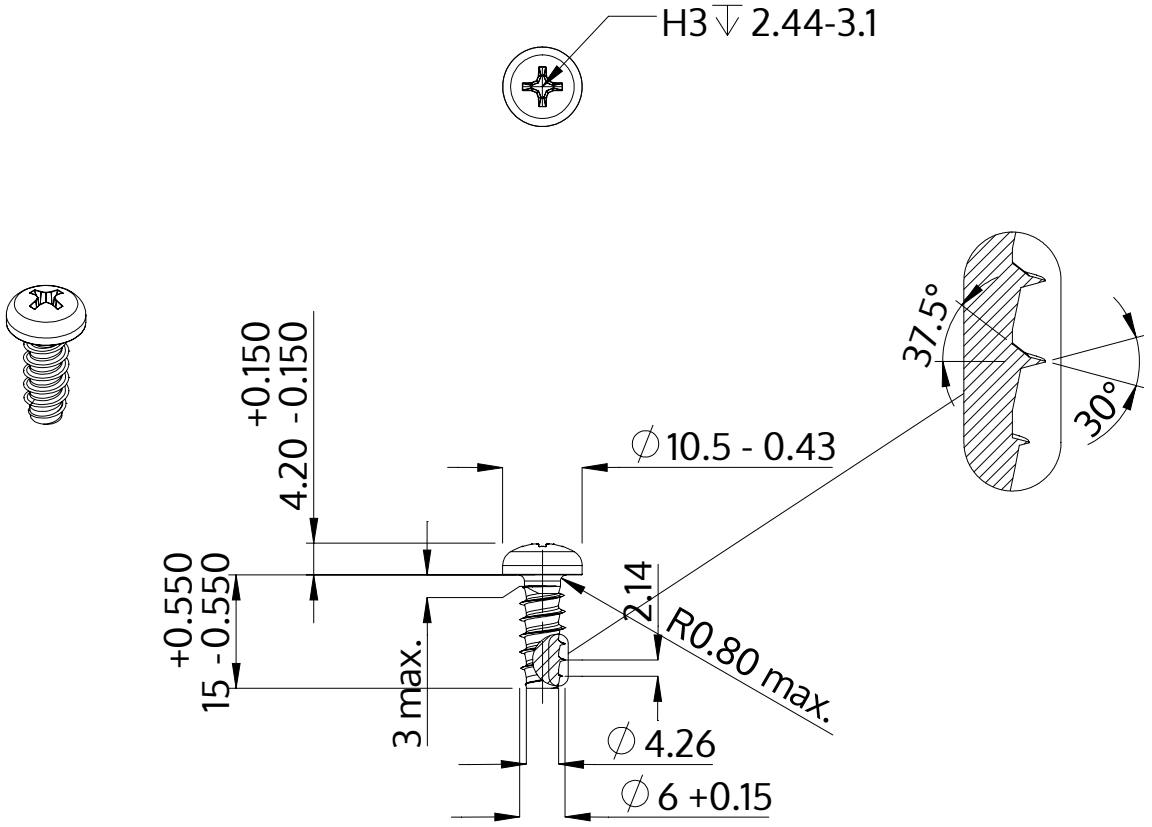

Description	STP32 6.0x15.0 - H3
Material	steel, hardened
Surface	zinc-plated 5-7 µm, baked, blue / transparent passivated
Weight	3.918 kg / 1000 pieces

SCREWERK	**STP320600150S**	
Metric Drawing A4	Scale None:1	2024-04