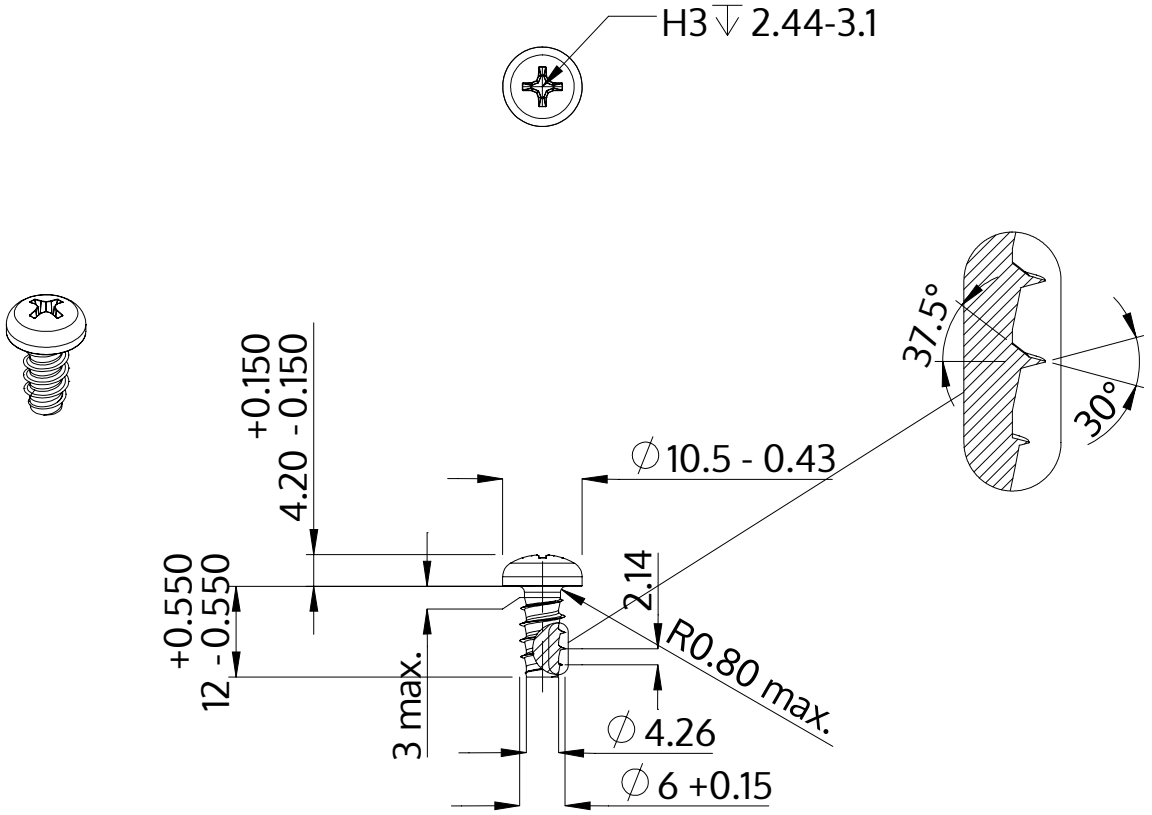

Description	STP32 6.0x12.0 - H3
Material	stainless-steel A2
Surface	bright, pickled and passivated
Weight	3.511 kg / 1000 pieces

SCREWERK	**STP320600120E**	
Metric Drawing A4	Scale None:1	2024-04