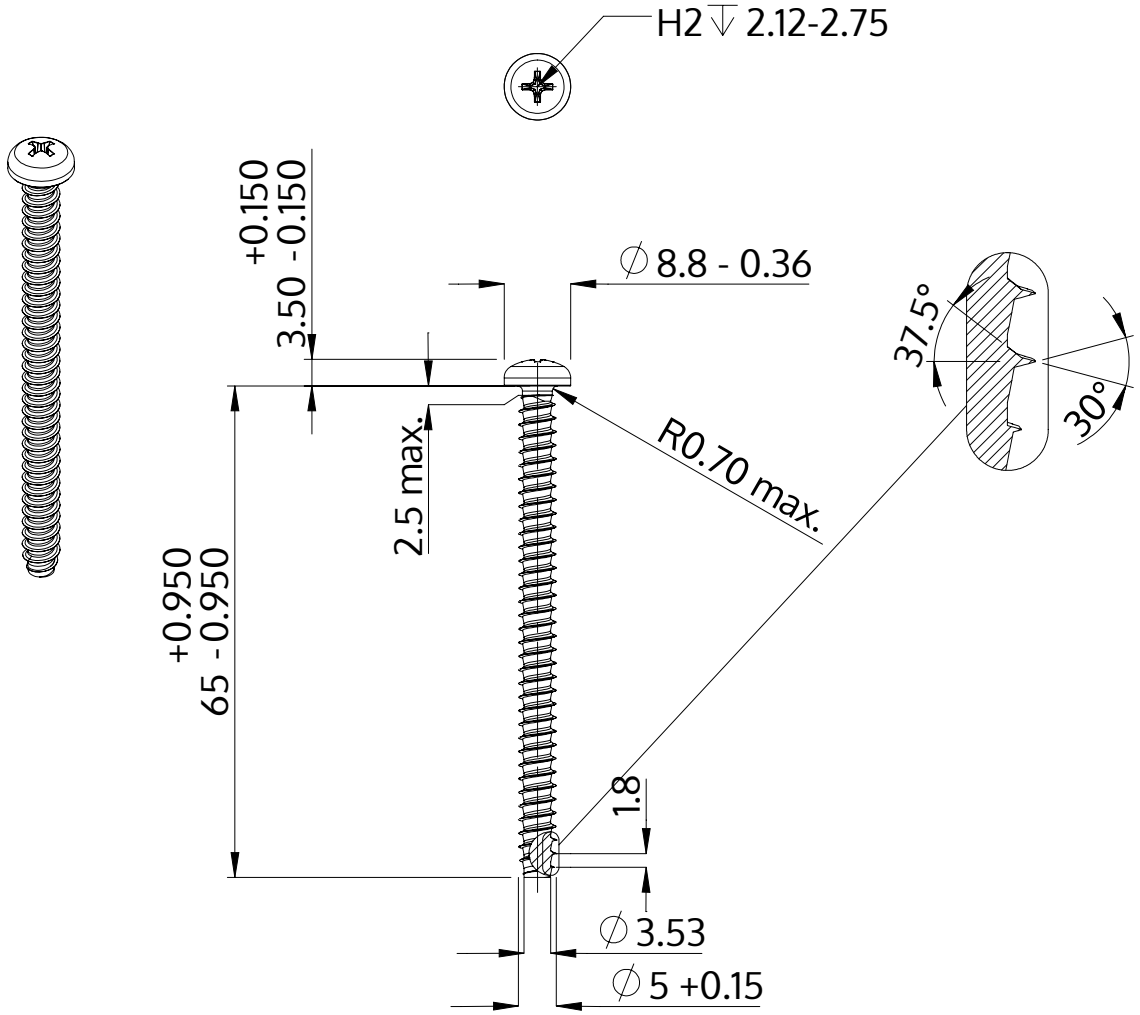

Description	STP32 5.0x65.0 - H2
Material	steel, hardened
Surface	zinc-plated 5-7 µm, baked, blue / transparent passivated
Weight	7.263 kg / 1000 pieces

SCREWERK	**STP320500650S**	
Metric Drawing A4	Scale 2:1	2024-10