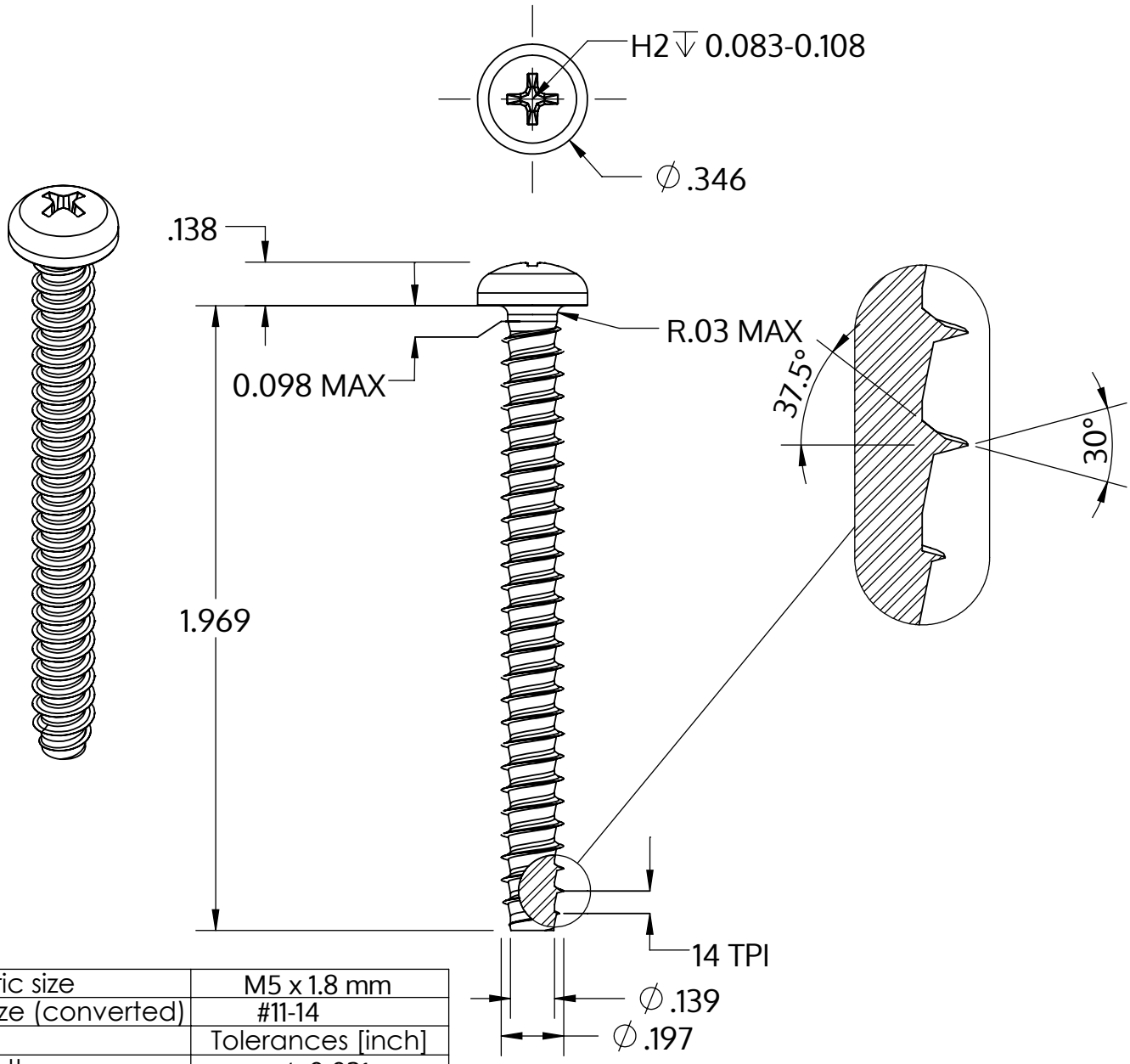

Metric size	M5 x 1.8 mm
US size (converted)	#11-14
	Tolerances [inch]
Length	+/- 0.031
Head diameter	+0 / -0.014
Head height	+/- 0.005
Thread diameter	+0.005 / -0

Description	STP32 5.0x50.0 - H2
Matière	acier inoxydable A2
Surface	brillant décapé et passivé
Poids	5.844 kg / 1000 Unité

SCREWERK	**STP320500500E**	
_Zoll Zeichnung Größe A	Redimensionner 2:1	2024-10