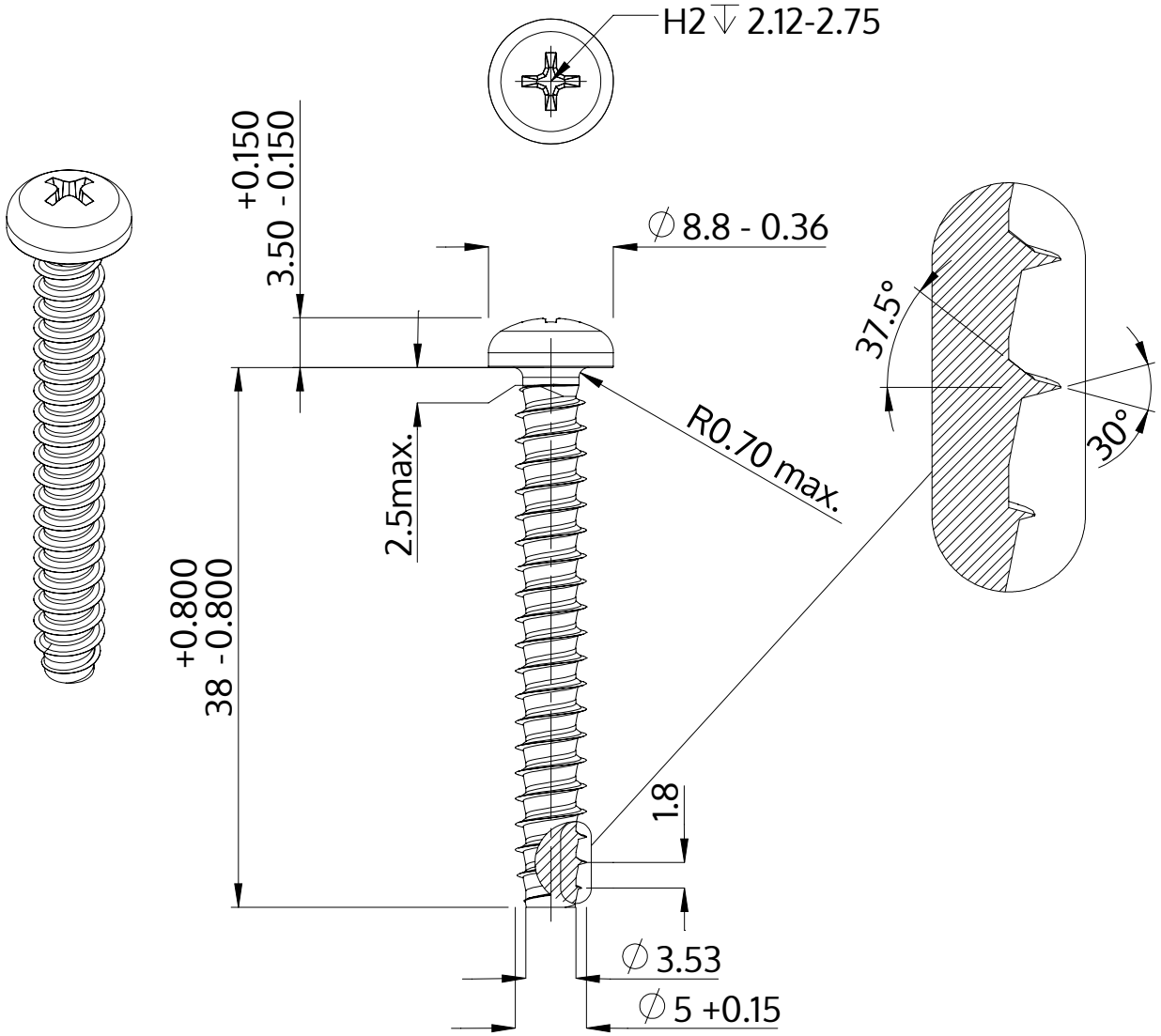

Description	STP32 5.0x38.0 - H2
Material	stainless-steel A2
Surface	bright, pickled and passivated
Weight	4.709 kg / 1000 pieces

SCREWERK	**STP320500380E**	
Metric Drawing A4	Scale 2:1	2024-10