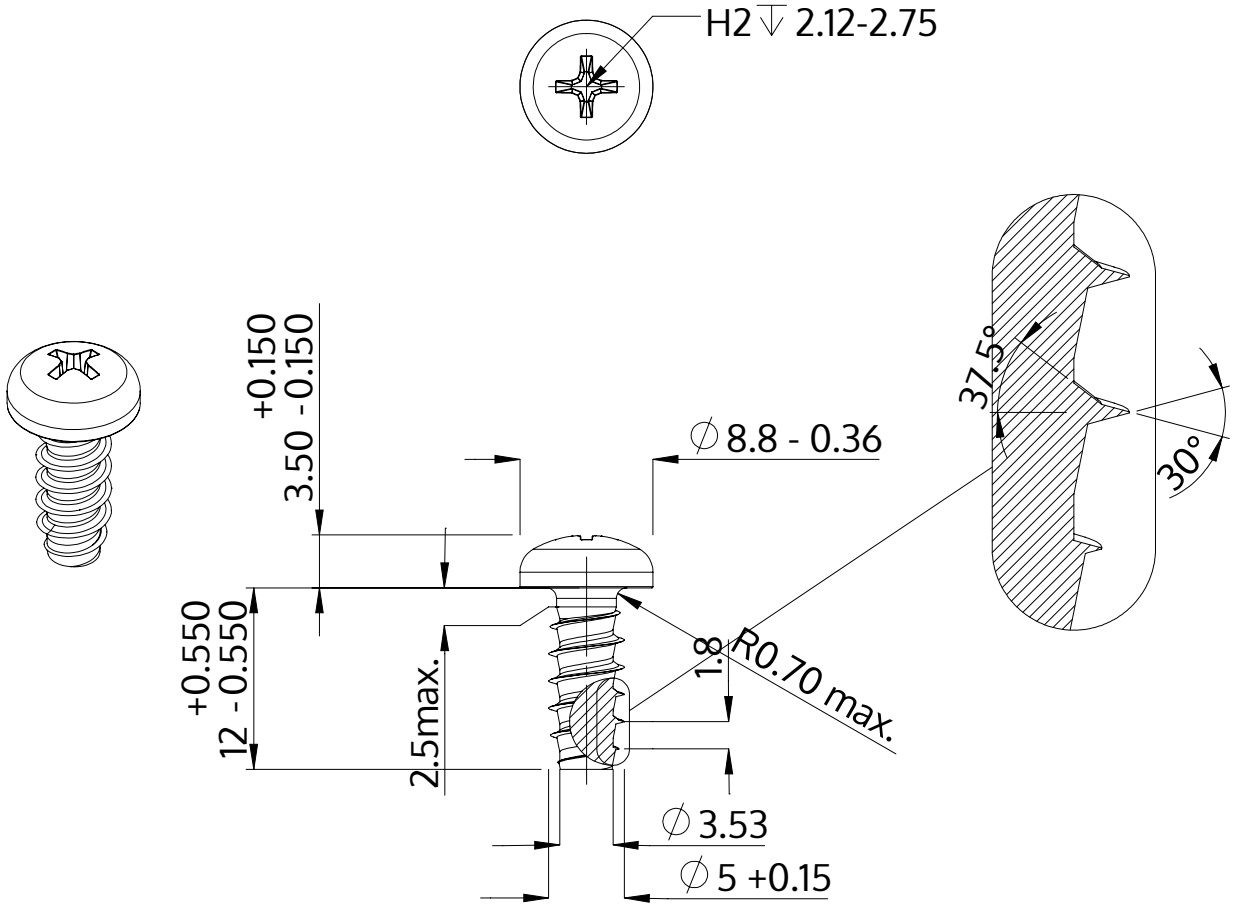

Description	STP32 5.0x12.0 - H2
Material	stainless steel A4
Surface	bright, pickled and passivated
Weight	2.249 kg / 1000 pieces

SCREWERK	**STP320500120C**	
Metric Drawing A4	Scale 2:1	2024-10