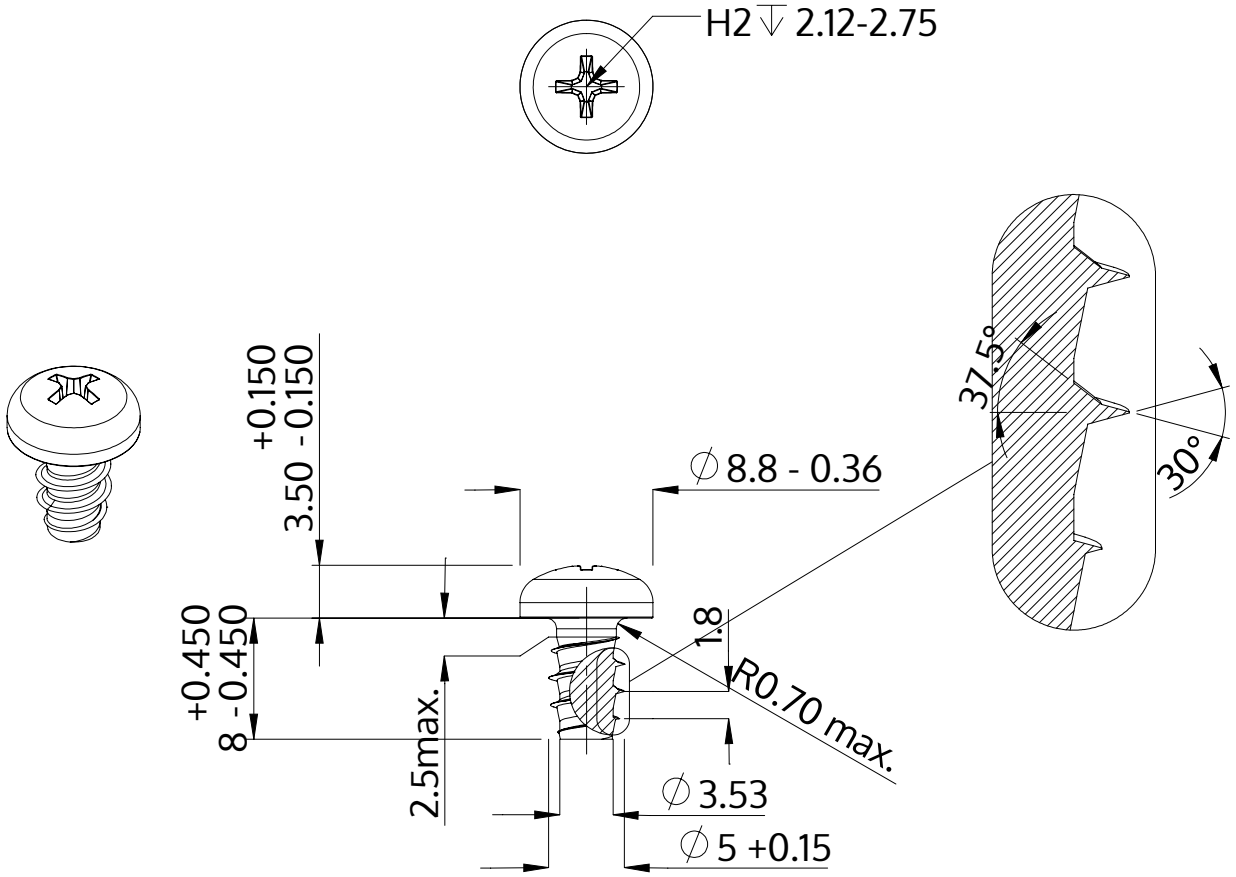

Description	STP32 5.0x8.0 - H2
Material	steel, hardened
Surface	Zinc-Nickel-plated min. 5µm, passivated black/ Cr-VI-free, baked, sealed
Weight	1.871 kg / 1000 pieces

SCREWERK	**STP320500080B**	
Metric Drawing A4	Scale None:1	2024-04