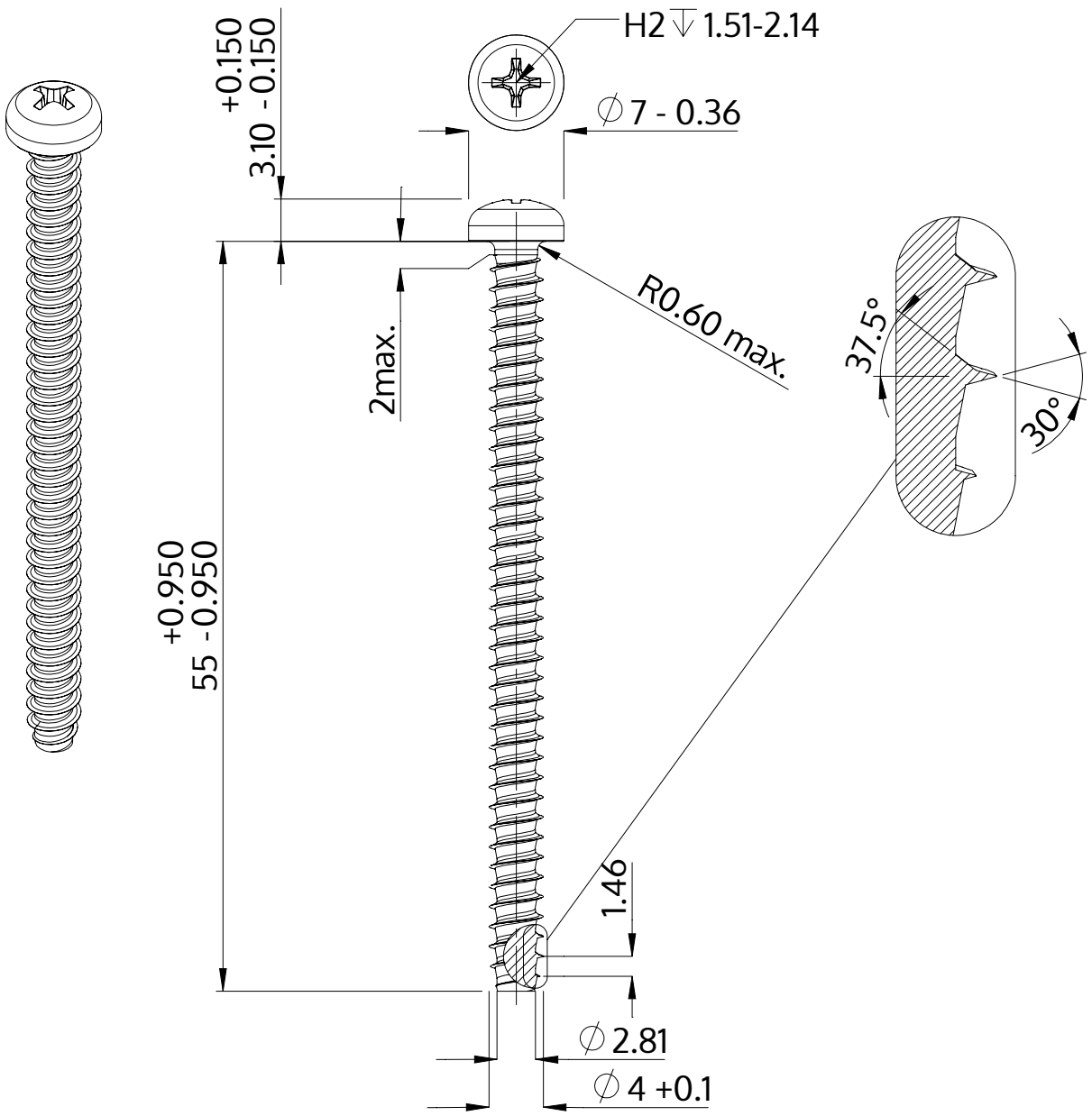

Description	STP32 4.0x55.0 - H2
Material	stainless-steel A2
Surface	bright, pickled and passivated
Weight	3.948 kg / 1000 pieces

SCREWERK	**STP320400550E**	
Metric Drawing A4	Scale 2:1	2024-10