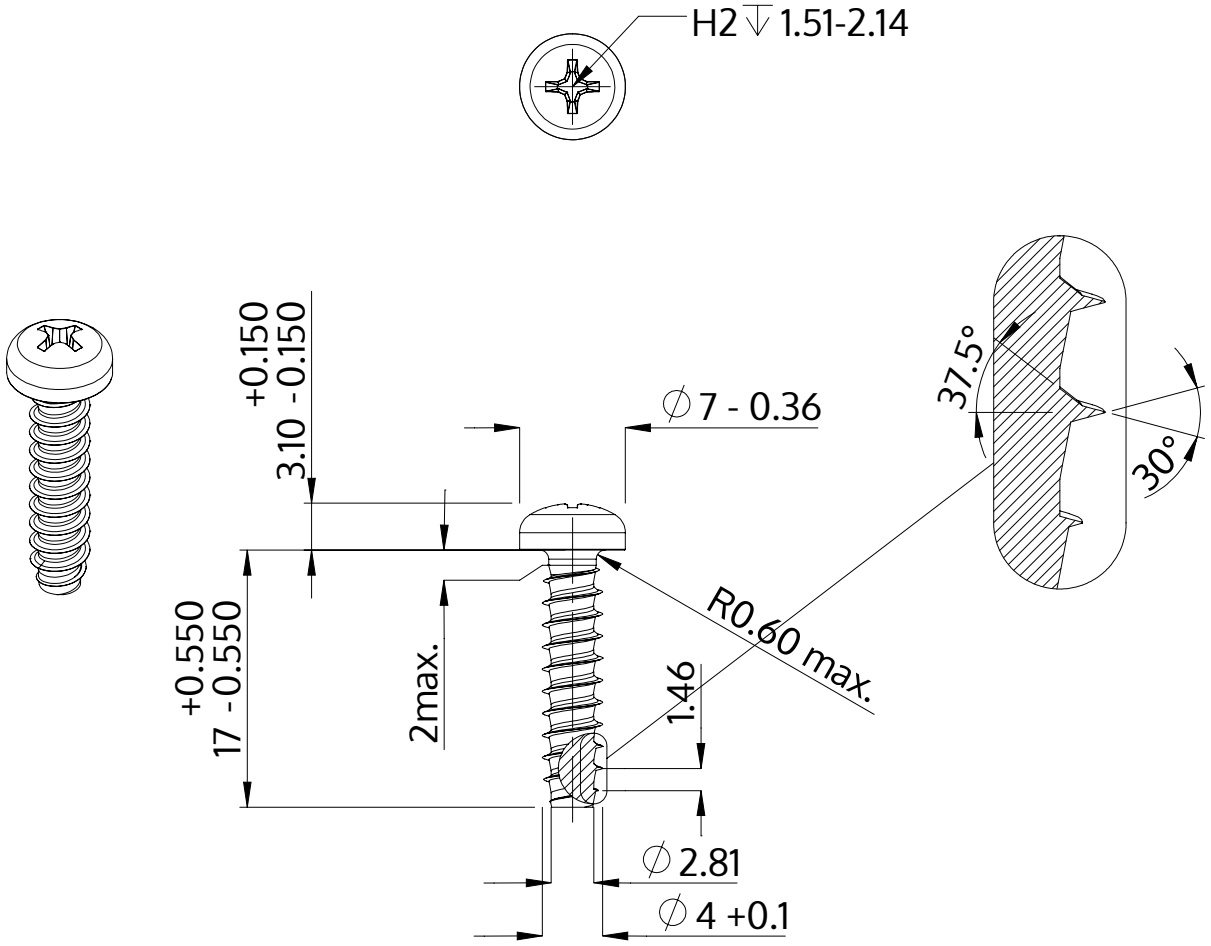


| | |
|---|---|
| Description | STP32 4.0x17.0 - H2 |
| Material | steel, hardened |
| Surface | Zinc-Nickel-plated min. 5µm, passivated black/ Cr-VI-free, baked, sealed |
| Weight | 1.644 kg / 1000 pieces |

| | | |
|---|---|---|
| SCREWERK | **STP320400170B** | |
| Metric Drawing A4 | Scale 2:1 | 2024-10 |