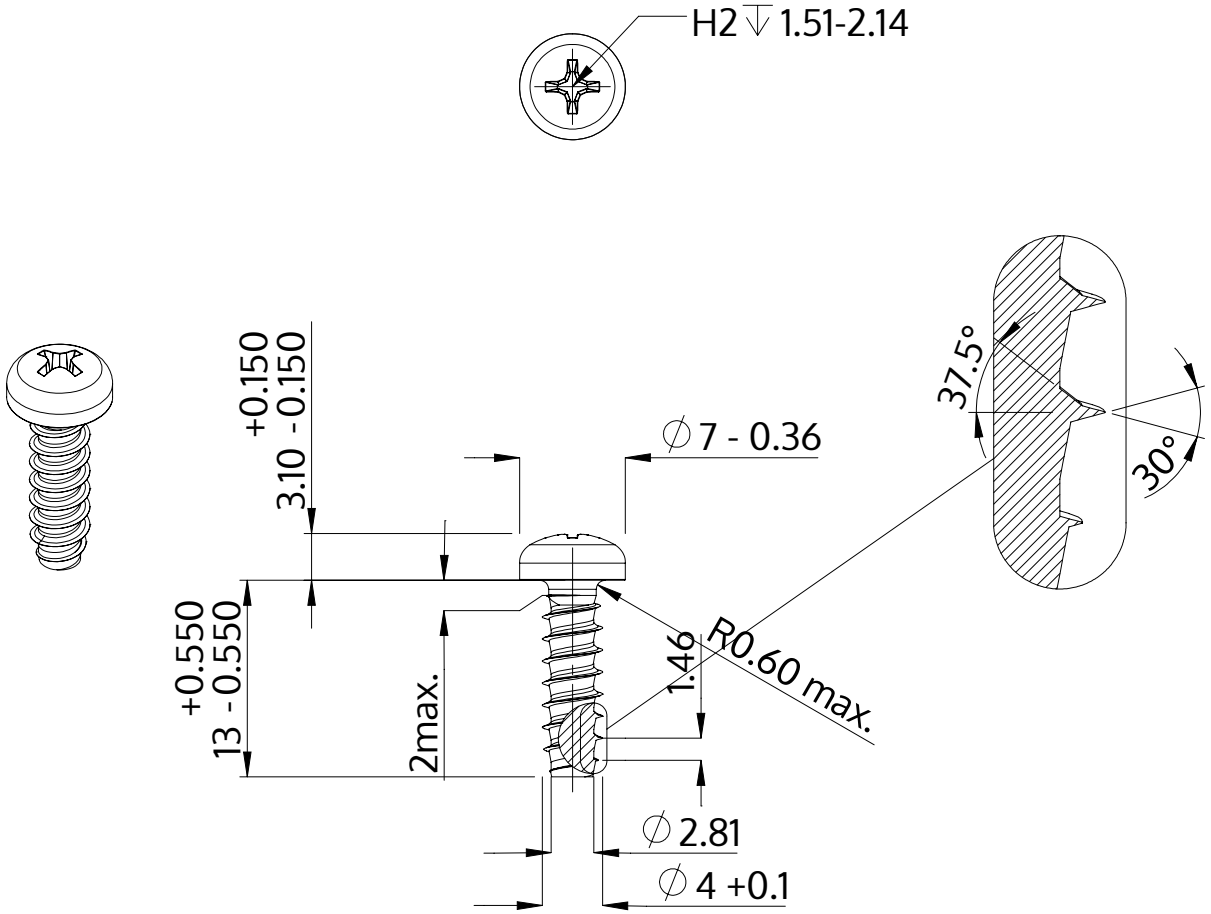

Description	STP32 4.0x13.0 - H2
Material	stainless-steel A2
Surface	bright, pickled and passivated
Weight	1.401 kg / 1000 pieces

SCREWERK	**STP320400130E**	
Metric Drawing A4	Scale 2:1	2024-10