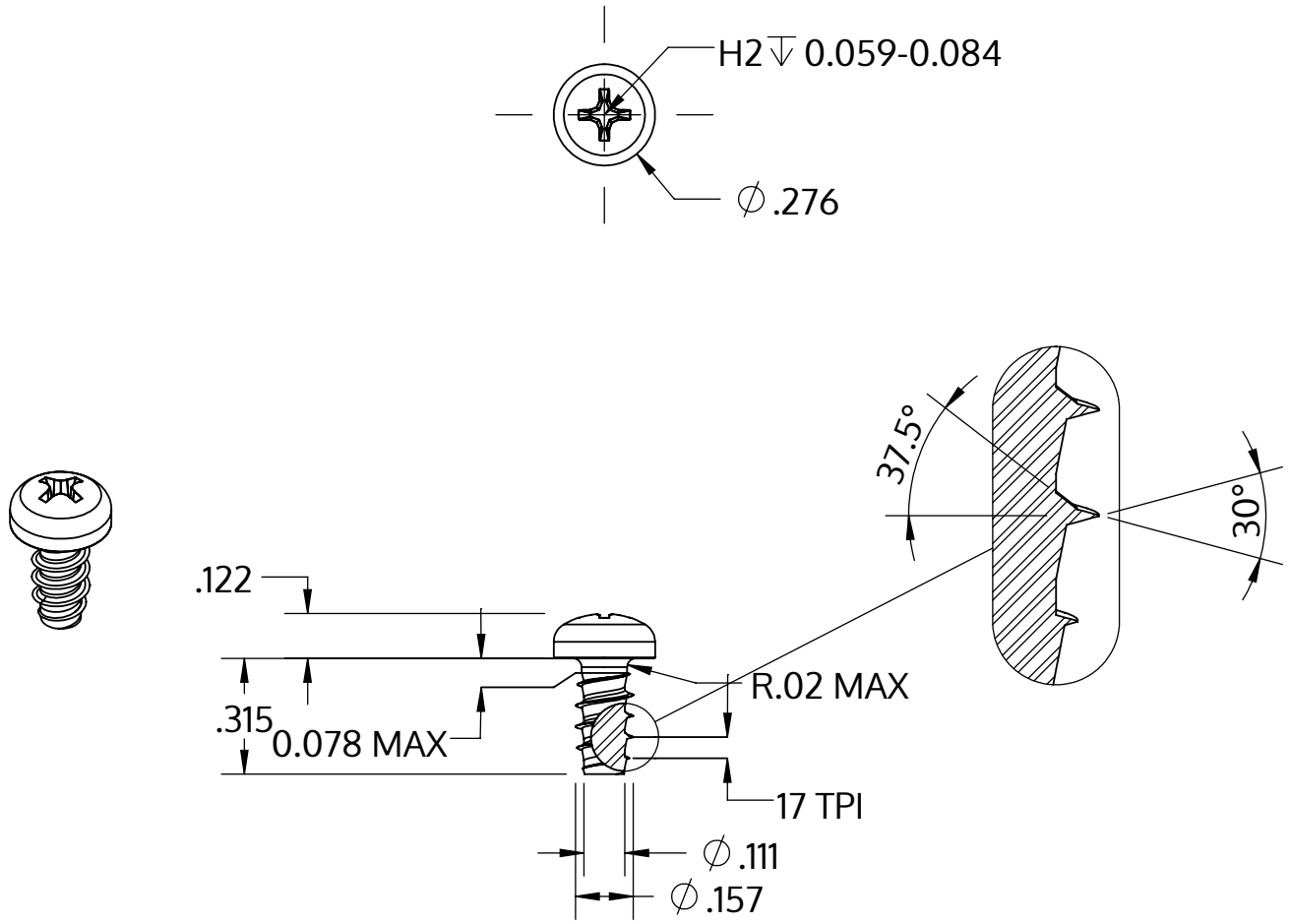

Metric size	M4 x 1.46 mm
US size (converted)	#8-17
	Tolerances [inch]
Length	+/- 0.017
Head diameter	+0 / -0.014
Head height	+/- 0.005
Thread diameter	+0.003 / -0

Description	STP32 4.0x8.0 - H2
Material	stainless steel A4
Surface	bright, pickled and passivated
Weight	1.098 kg / 1000 pieces

SCREWERK	**STP320400080C**	
Inch Drawing Size A	Scale 2:1	2024-10