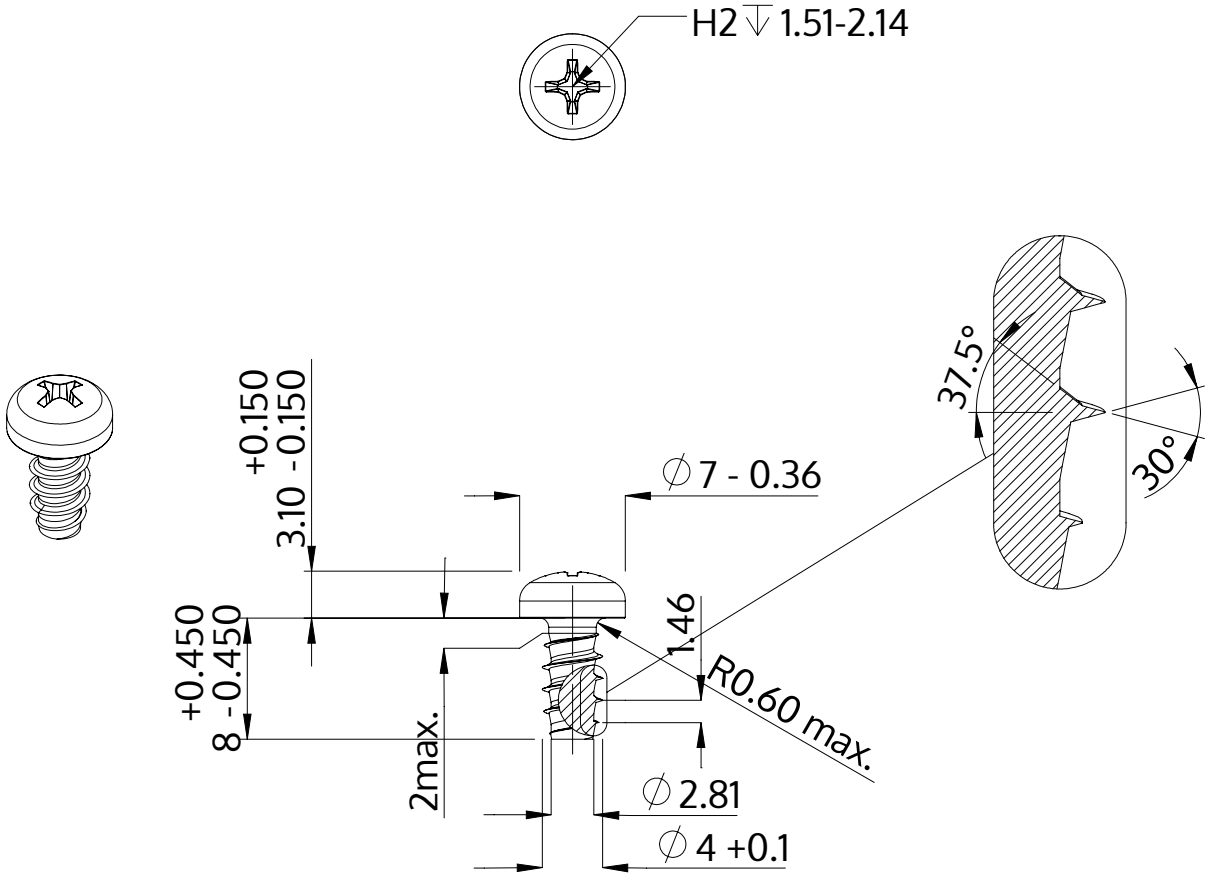

Description	STP32 4.0x8.0 - H2
Material	stainless steel A4
Surface	bright, pickled and passivated
Weight	1.098 kg / 1000 pieces

SCREWERK	**STP320400080C**	
Metric Drawing A4	Scale 2:1	2024-10