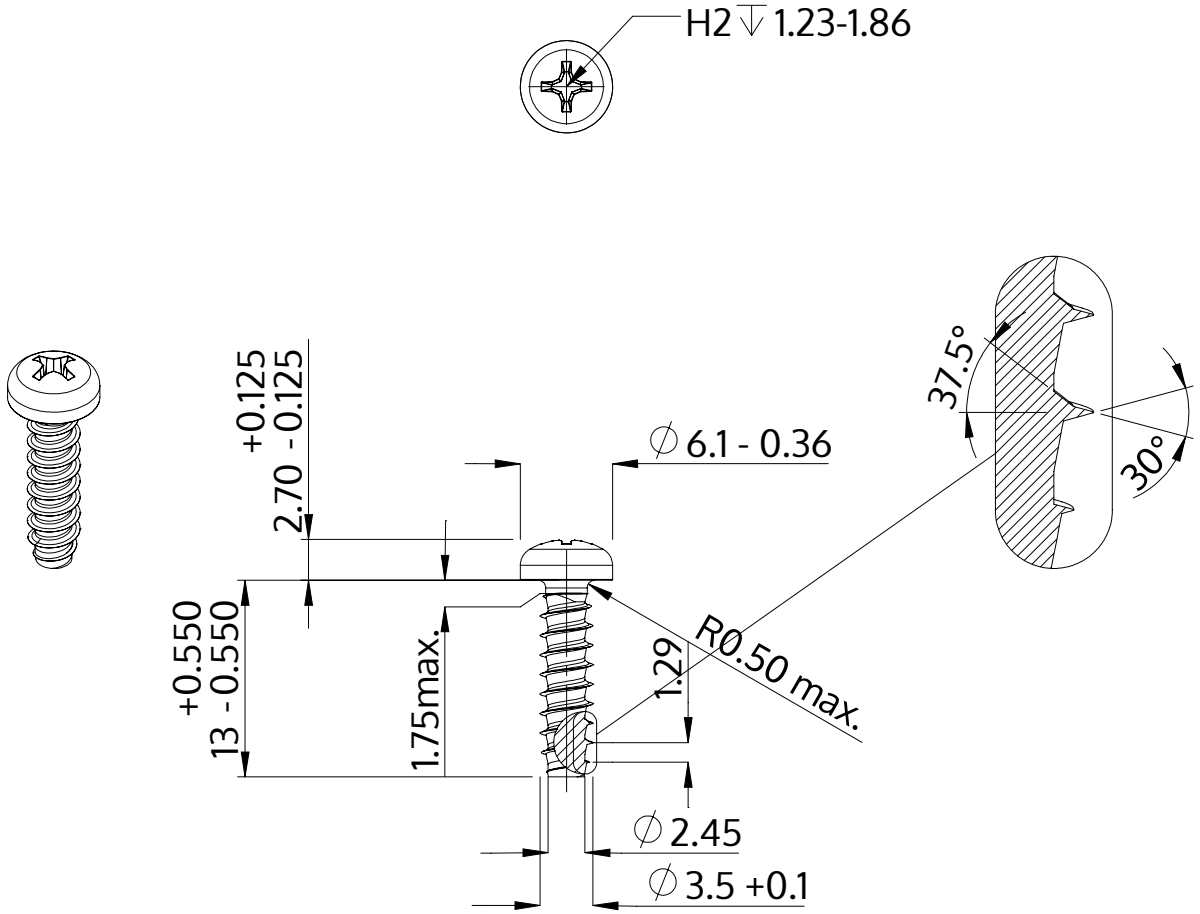

Description	STP32 3.5x13.0 - H2
Material	stainless steel A4
Surface	bright, pickled and passivated
Weight	1.031 kg / 1000 pieces

SCREWERK	**STP320350130C**	
Metric Drawing A4	Scale 2:1	2024-10