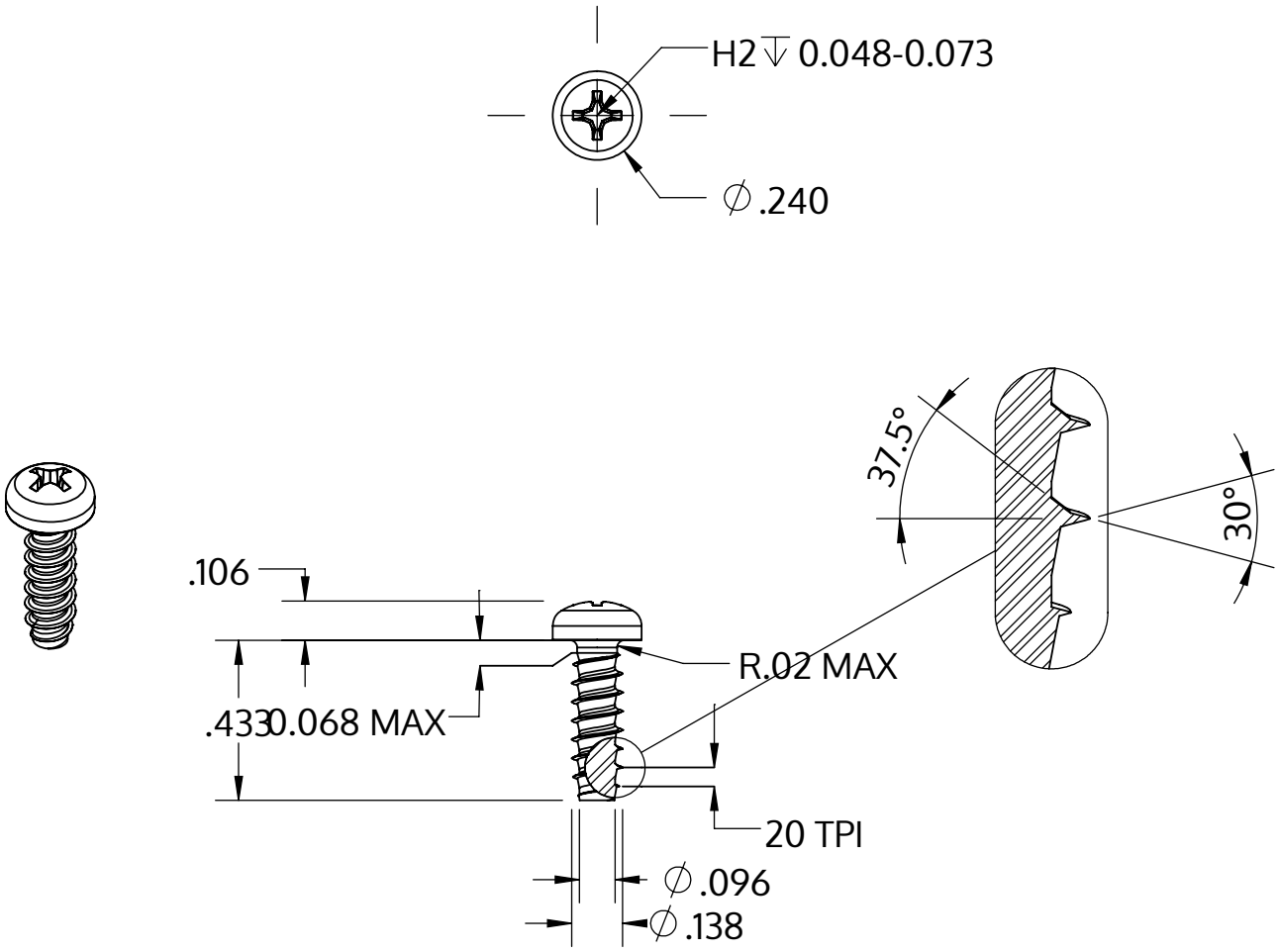


| | |
|---|---|
| Metric size | M3.5 x 1.29 mm |
| US size (converted) | #6-20 |
| | Tolerances [inch] |
| Length | +/- 0.021 |
| Head diameter | +0 / -0.014 |
| Head height | +/- 0.004 |
| Thread diameter | +0.003 / -0 |

| | |
|---|---|
| Description | STP32 3.5x11.0 - H2 |
| Matière | Acier,trempé et revenu |
| Surface | Zinc Nickel passivé noir, trempée, scéllée |
| Poids | 0.936 kg / 1000 Unité |

| | | |
|---|---|---|
| SCREWERK | **STP320350110B** | |
| _Zoll Zeichnung Größe A | Redimensionner 2:1 | 2024-10 |