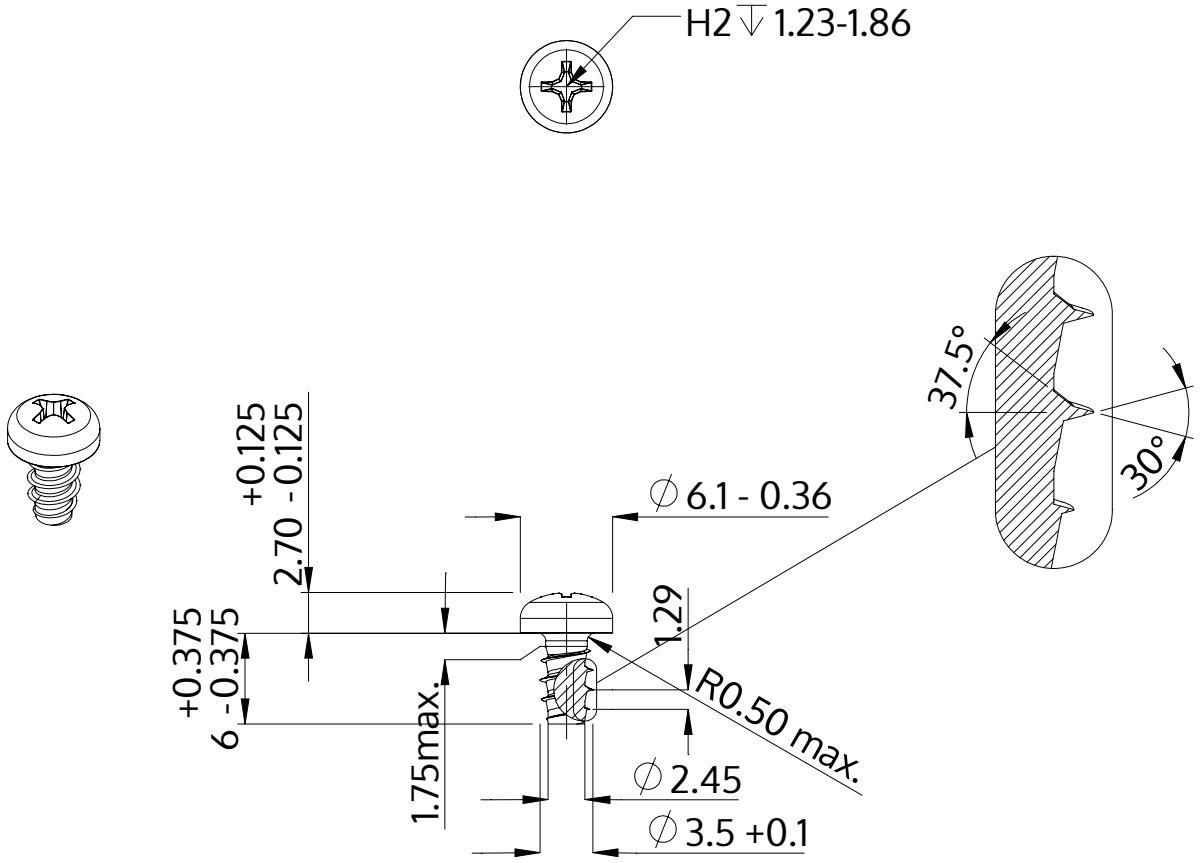

Description	STP32 3.5x6.0 - H2
Material	stainless-steel A2
Surface	bright, pickled and passivated
Weight	0.700 kg / 1000 pieces

SCREWERK	**STP320350060E**	
Metric Drawing A4	Scale None:1	2024-04