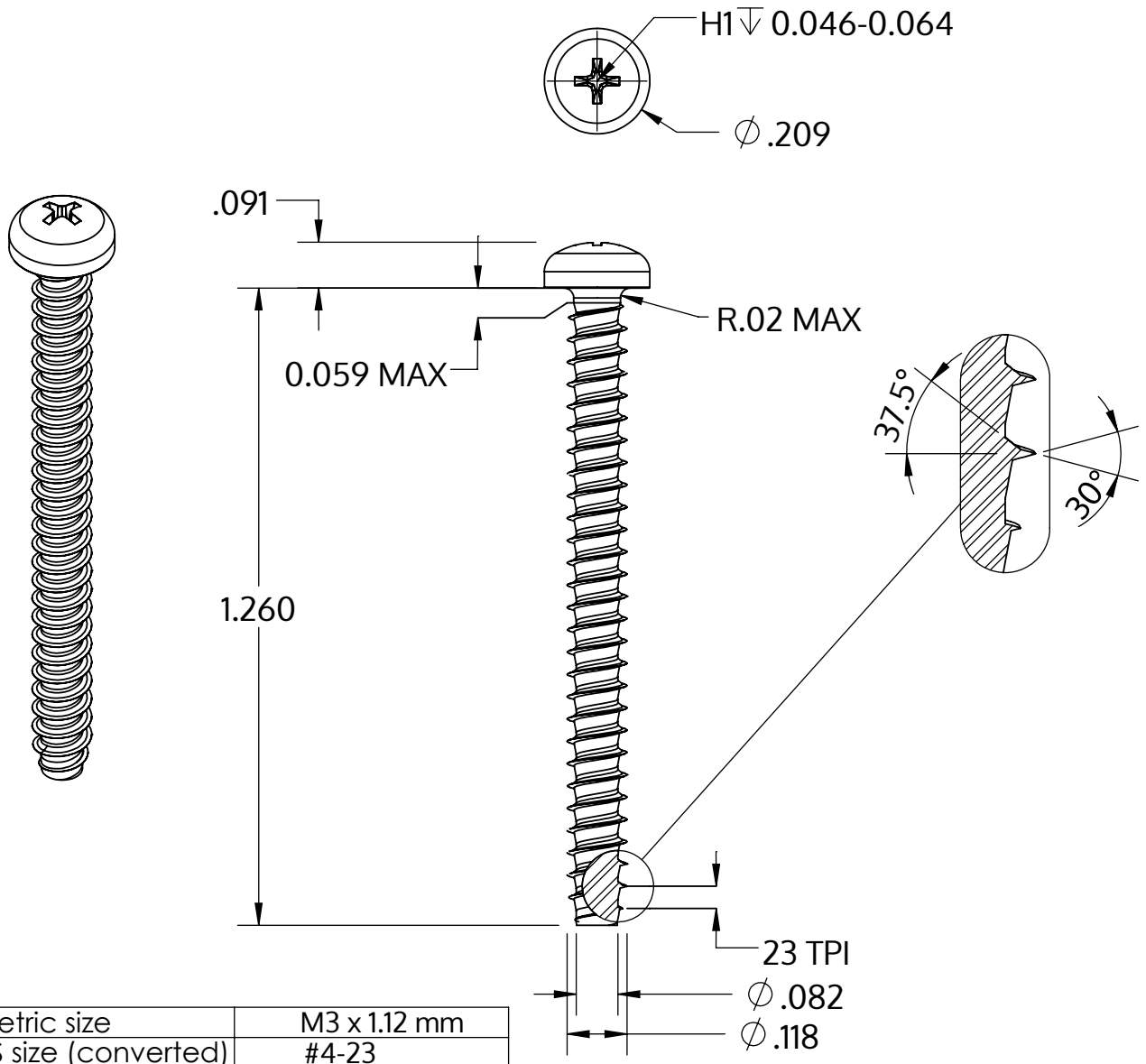

Metric size	M3 x 1.12 mm
US size (converted)	#4-23
	Tolerances [inch]
Length	+/- 0.031
Head diameter	+0 / -0.011
Head height	+/- 0.004
Thread diameter	+0.003 / -0

Descriere	STP32 3.0x32.0 - H1
Material	oțel, călit
Exterior	zincat, Nichelat, pasivat negru / nu conține Cr-VI, recopt, ermetizat
Greutate	1.362 kg / 1000 unități

SCREWERK	**STP320300320B**	
_Zoll Zeichnung Größe A	Scalarea 3:1	2024-10