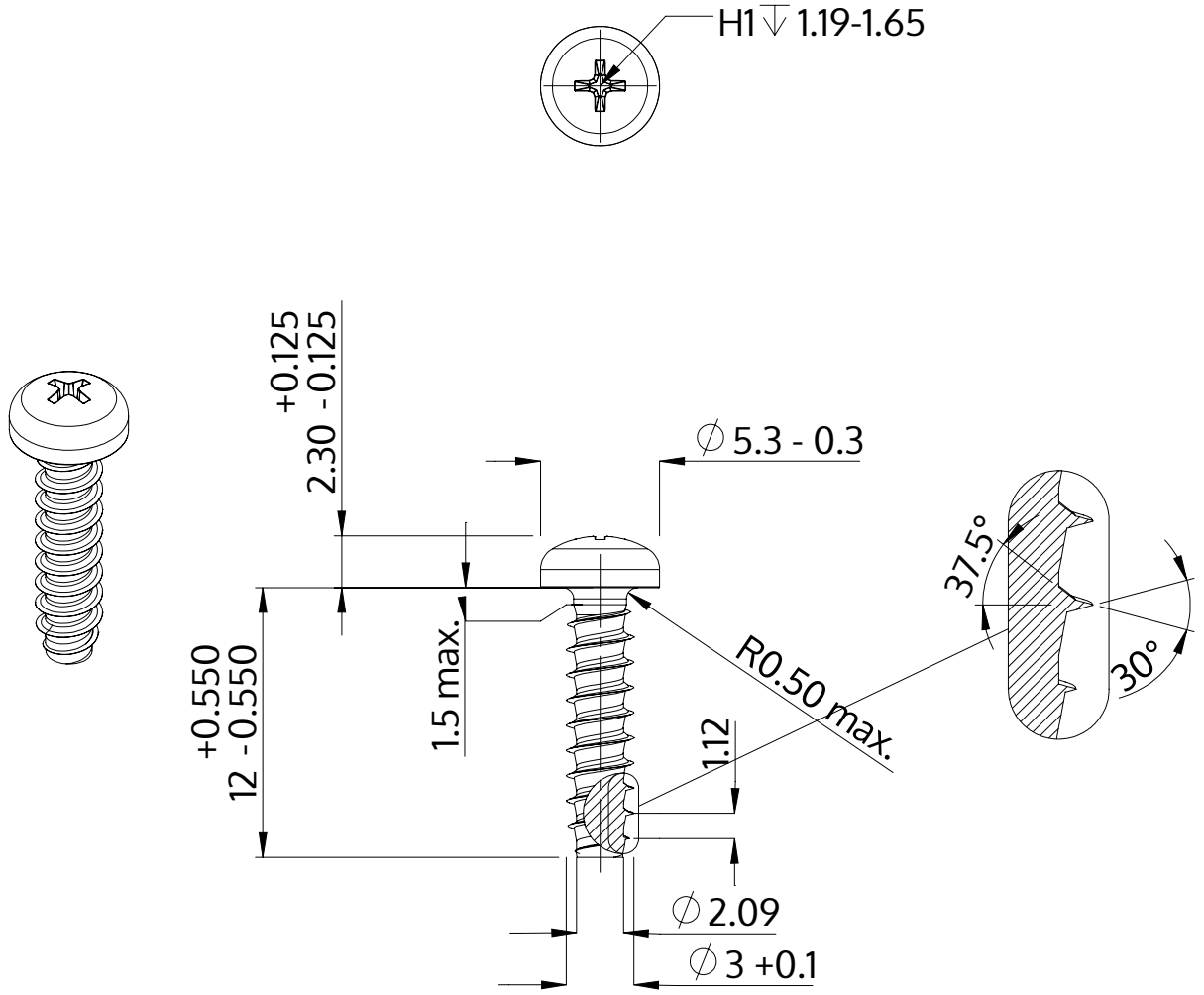

Description	STP32 3.0x12.0 - H1
Material	stainless-steel A2
Surface	bright, pickled and passivated
Weight	0.683 kg / 1000 pieces

SCREWERK	**STP320300120E**	
Metric Drawing A4	Scale 3:1	2024-10