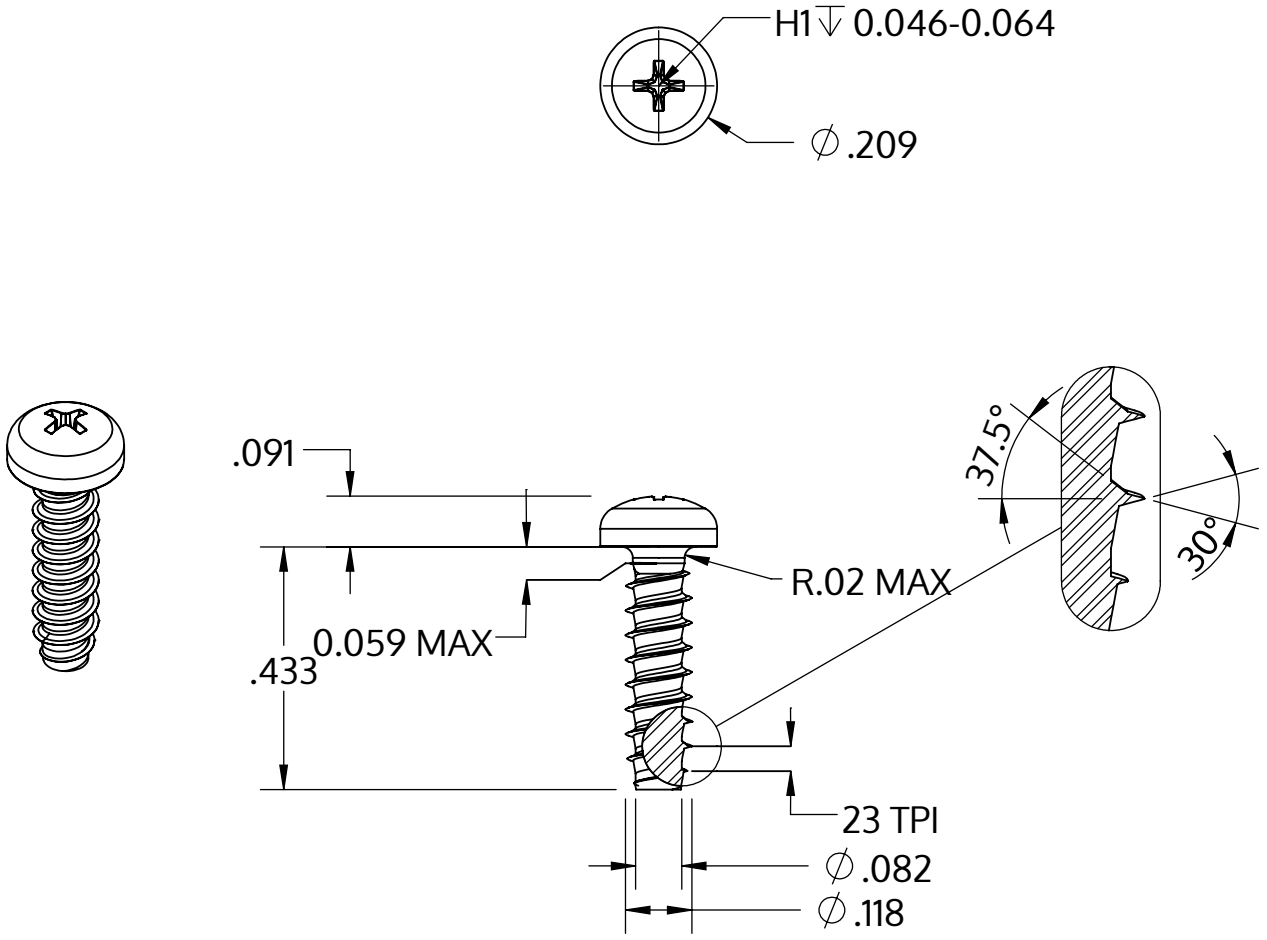


| | |
|---|---|
| Metric size | M3 x 1.12 mm |
| US size (converted) | #4-23 |
| | Tolerances [inch] |
| Length | +/- 0.021 |
| Head diameter | +0 / -0.011 |
| Head height | +/- 0.004 |
| Thread diameter | +0.003 / -0 |

| | |
|---|---|
| Opis | STP32 3.0x11.0 - H1 |
| Materiał | Stal szlachetna A4 |
| Powierzchnia | Prosta, bejcowana i pasywowana |
| Waga | 0.649 kg / 1000 sztuk |

| | | |
|---|---|---|
| SCREWERK | **STP320300110C** | |
| _Zoll Zeichnung Größe A | Skala 3:1 | 2024-10 |