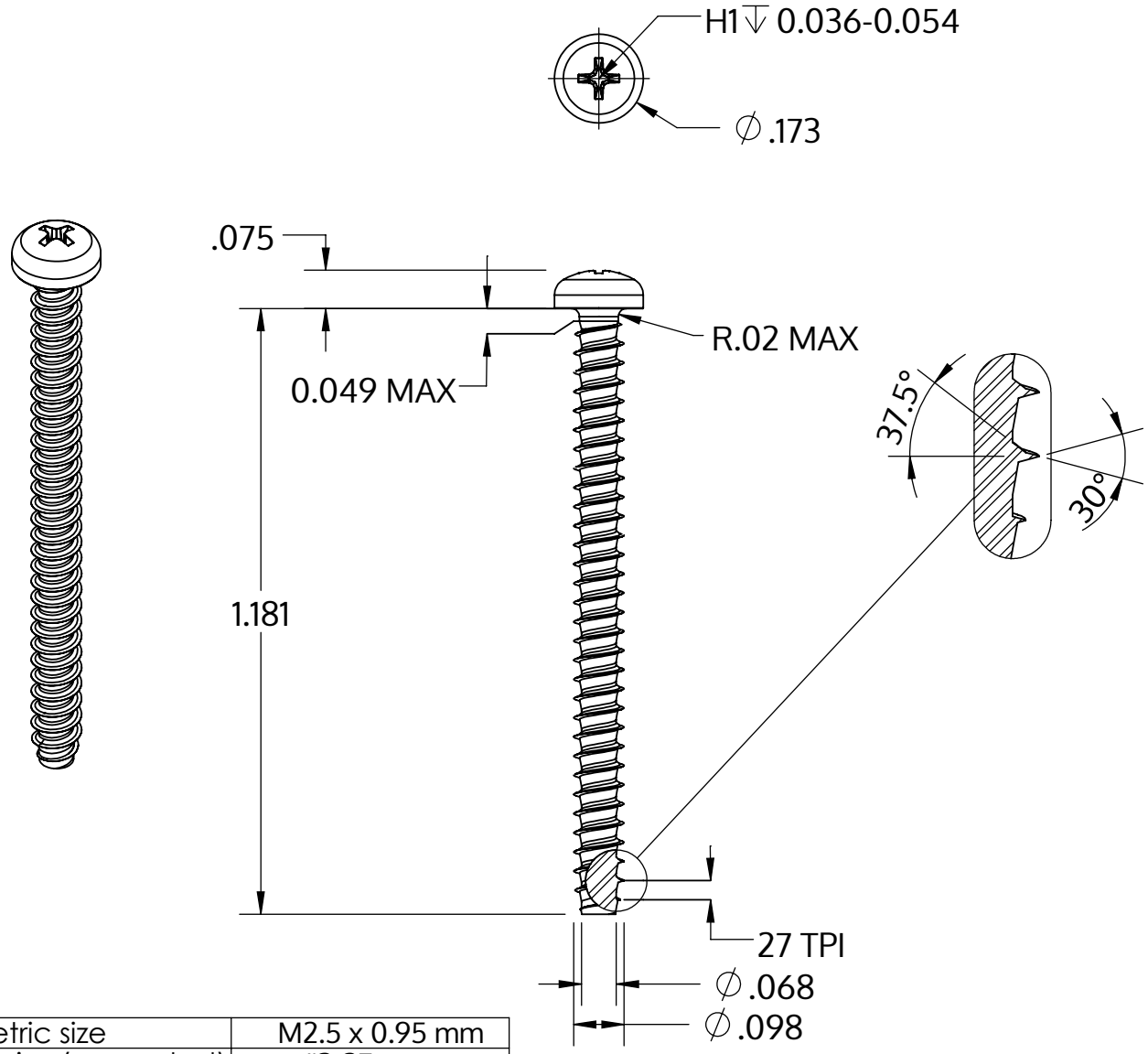


| | |
|---|---|
| Metric size | M2.5 x 0.95 mm |
| US size (converted) | #3-27 |
| | Tolerances [inch] |
| Length | +/- 0.025 |
| Head diameter | +0 / -0.011 |
| Head height | +/- 0.004 |
| Thread diameter | +0.003 / -0 |

| | |
|---|---|
| Descrizione | STP32 2.5x30.0 - H1 |
| Materiale | acciaio, temprato |
| Superficie | zincato 5-7 micron, ricotto, blu / trasparente passivato |
| Peso | 0.867 kg / 1000 pezzi |

| | | |
|---|---|---|
| SCREWERK | **STP320250300S** | |
| _Zoll Zeichnung Größe A | Scala 3:1 | 2024-10 |