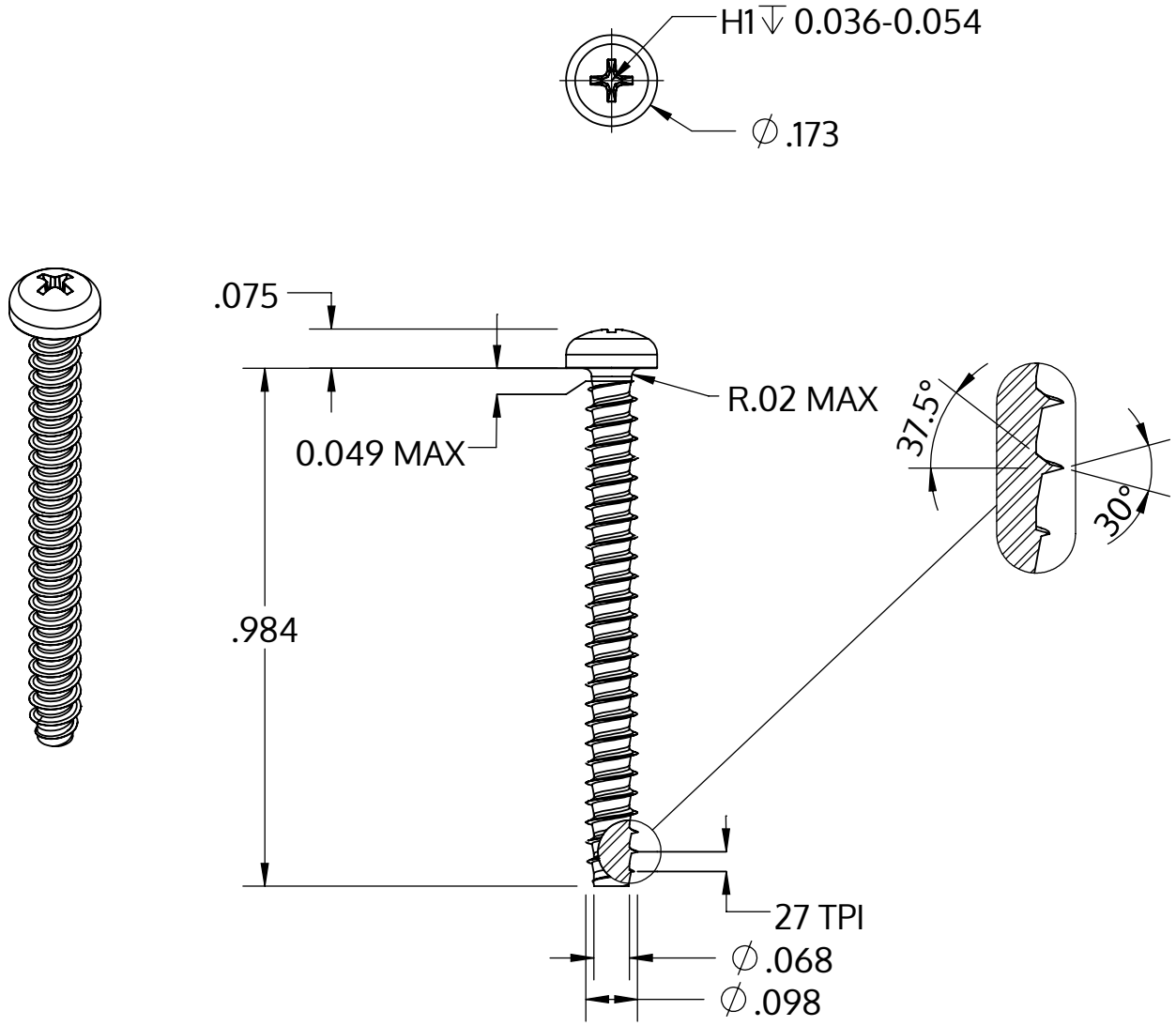


| | |
|---|---|
| Metric size | M2.5 x 0.95 mm |
| US size (converted) | #3-27 |
| | Tolerances [inch] |
| Length | +/- 0.025 |
| Head diameter | +0 / -0.011 |
| Head height | +/- 0.004 |
| Thread diameter | +0.003 / -0 |

| | |
|---|---|
| Beskrivning | STP32 2.5x25.0 - H1 |
| Material | rostfritt stål A2 |
| Yta | blank och passiviserad |
| Vikt | 0.747 kg / 1000 styck |

| | | |
|---|---|---|
| SCREWERK | **STP320250250E** | |
| _Zoll Zeichnung Größe A | Skala 3:1 | 2024-10 |