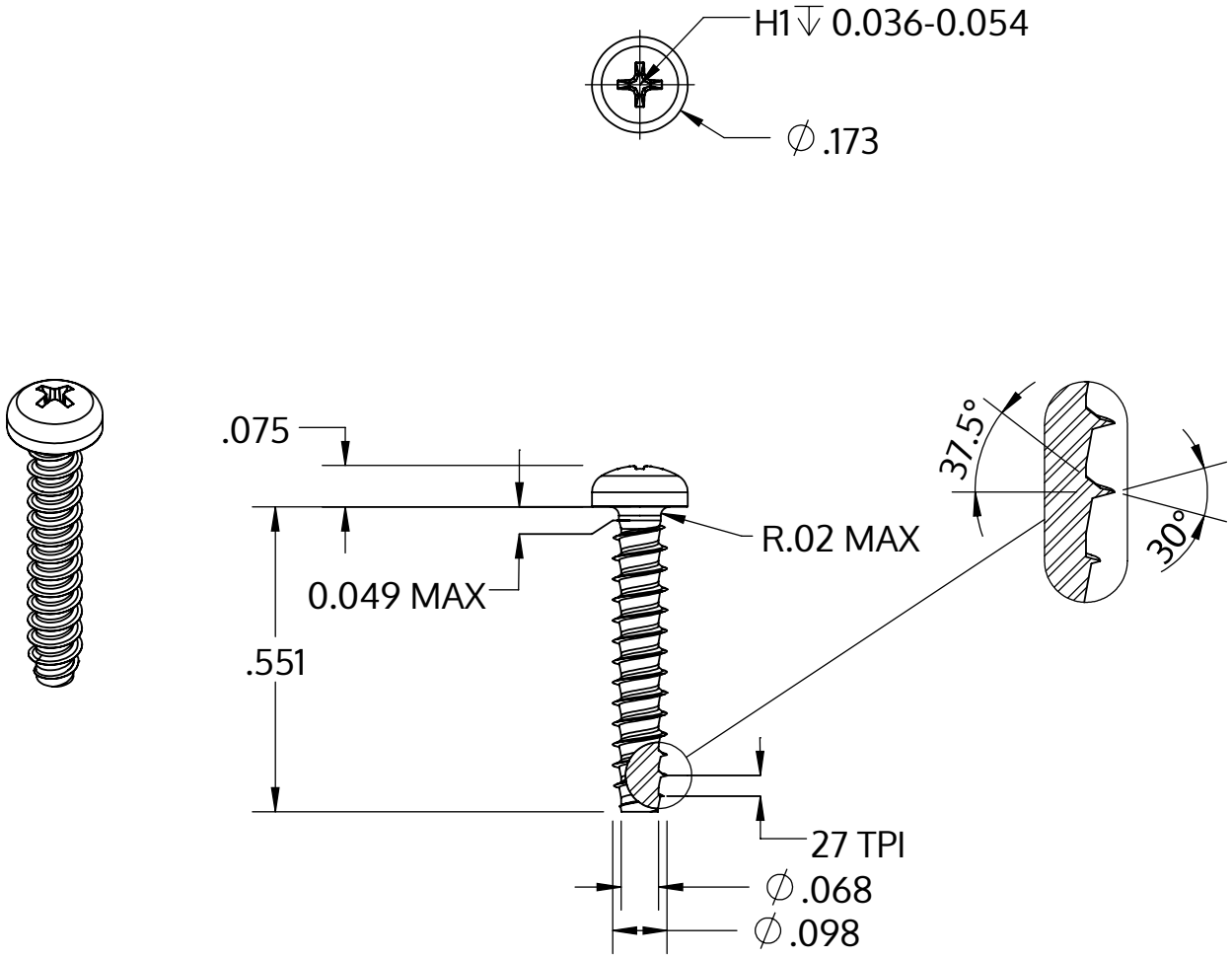

Metric size	M2.5 x 0.95 mm
US size (converted)	#3-27
	Tolerances [inch]
Length	+/- 0.021
Head diameter	+0 / -0.011
Head height	+/- 0.004
Thread diameter	+0.003 / -0

Descrizione	STP32 2.5x14.0 - H1
Materiale	acciaio inossidabile A2
Superficie	bianco-decapato e passivato
Peso	0.482 kg / 1000 pezzi

SCREWERK	**STP320250140E**	
_Zoll Zeichnung Größe A	Scala 3:1	2024-10