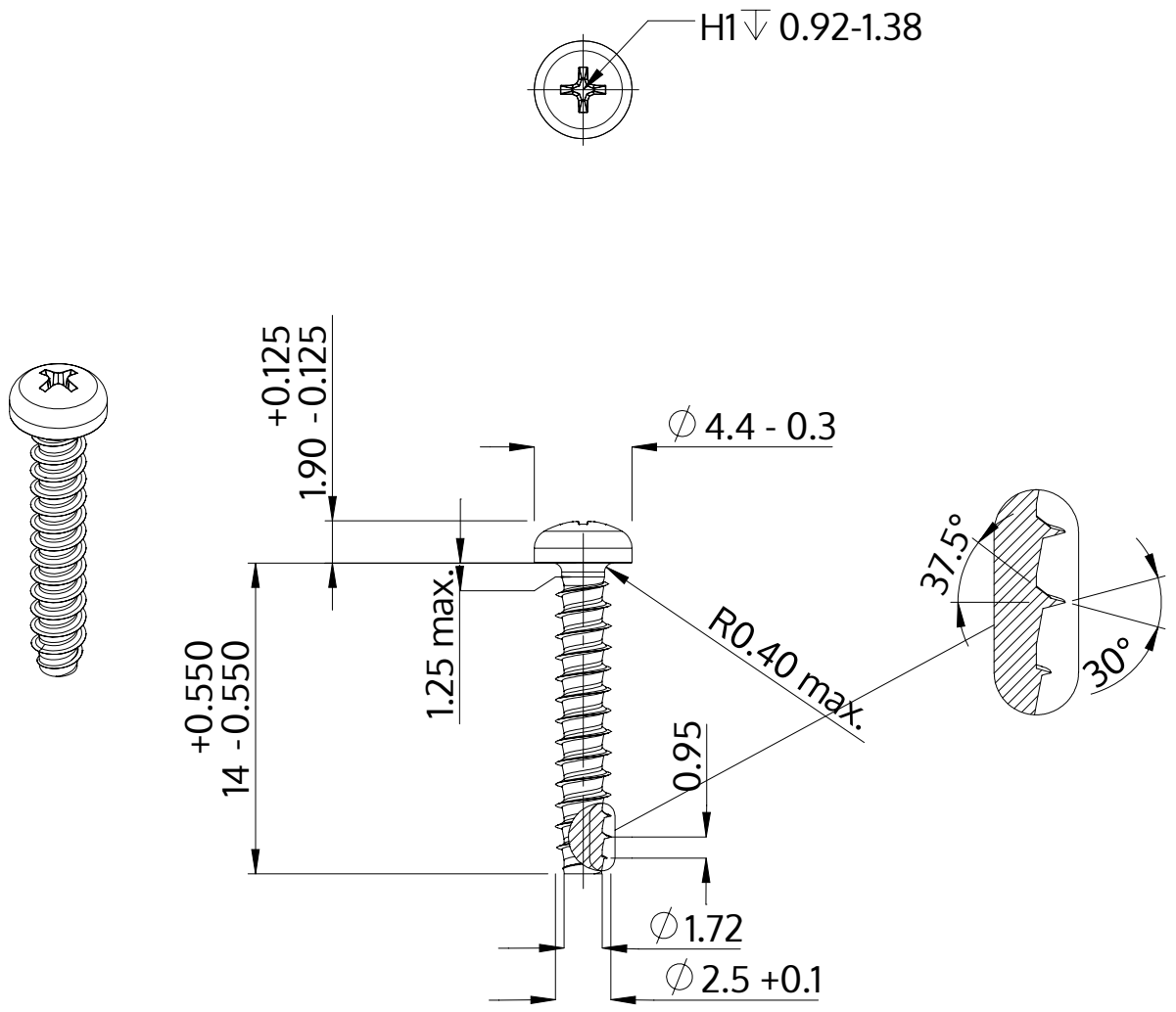

Description	STP32 2.5x14.0 - H1
Material	stainless-steel A2
Surface	bright, pickled and passivated
Weight	0.482 kg / 1000 pieces

SCREWERK	**STP320250140E**	
Metric Drawing A4	Scale 3:1	2024-10