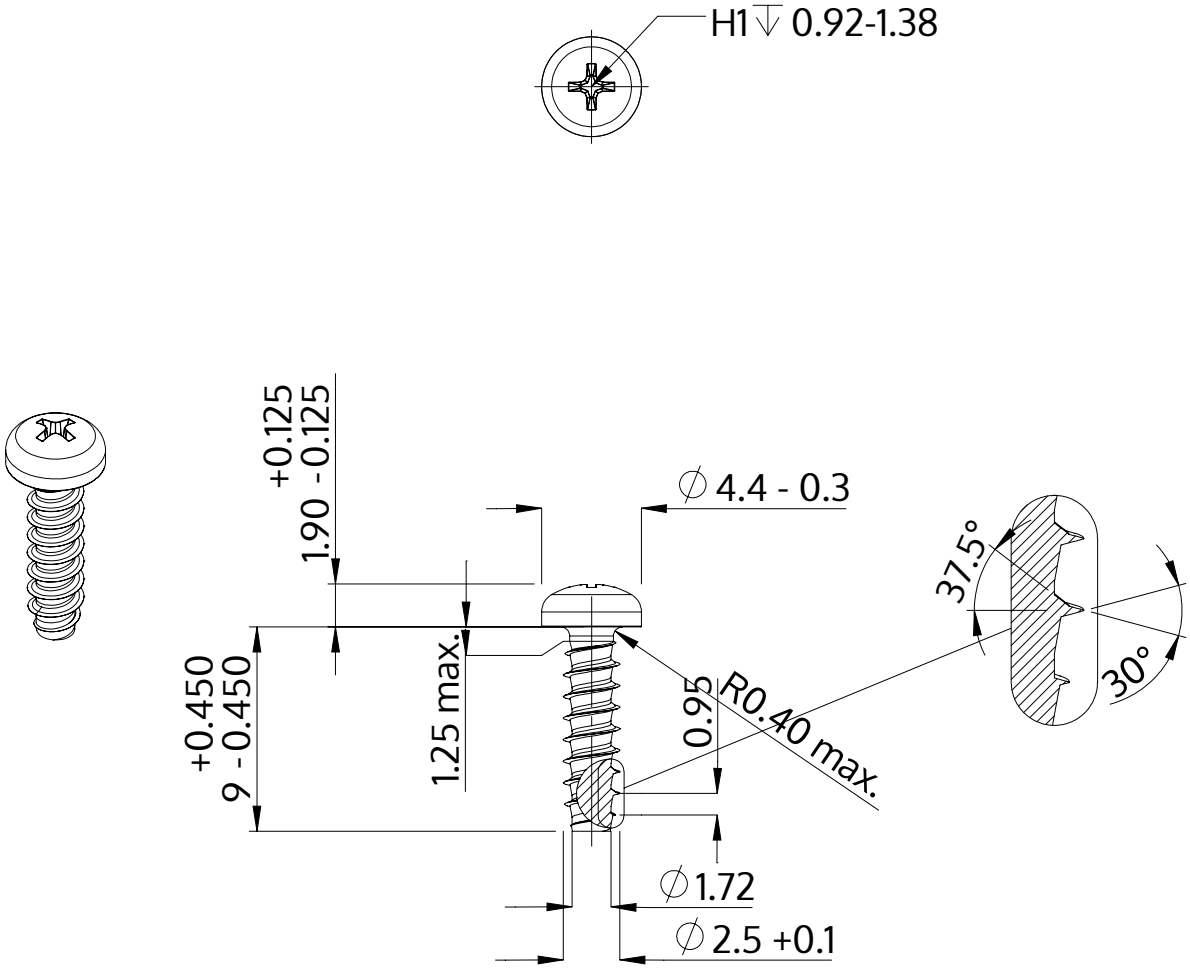

Description	STP32 2.5x9.0 - H1
Material	stainless steel A4
Surface	bright, pickled and passivated
Weight	0.362 kg / 1000 pieces

SCREWERK	**STP320250090C**	
Metric Drawing A4	Scale 3:1	2024-10