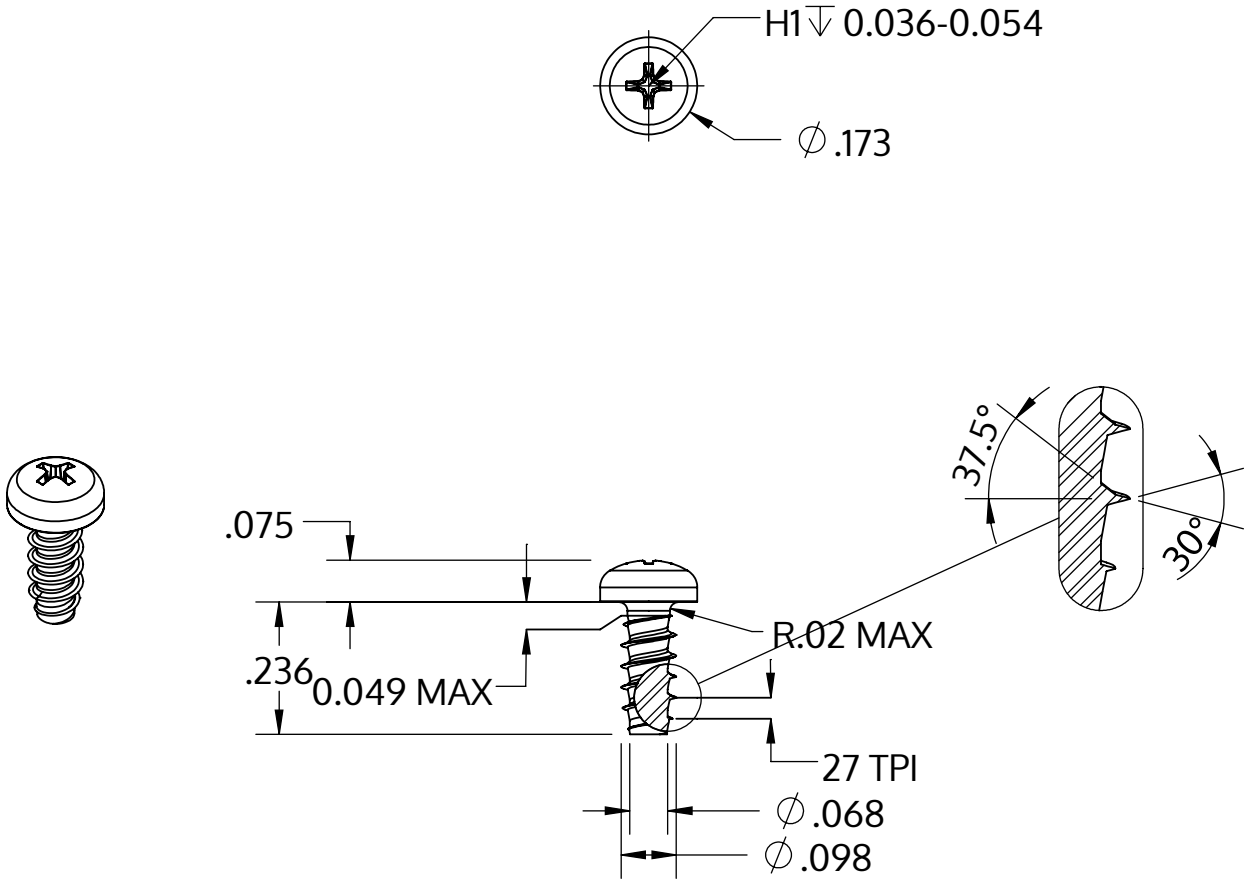


| | |
|---|---|
| Metric size | M2.5 x 0.95 mm |
| US size (converted) | #3-27 |
| | Tolerances [inch] |
| Length | +/- 0.014 |
| Head diameter | +0 / -0.011 |
| Head height | +/- 0.004 |
| Thread diameter | +0.003 / -0 |

| | |
|---|---|
| Description | STP32 2.5x6.0 - H1 |
| Material | stainless steel A4 |
| Surface | bright, pickled and passivated |
| Weight | 0.290 kg / 1000 pieces |

| | | |
|---|---|---|
| SCREWERK | **STP320250060C** | |
| Inch Drawing Size A | Scale 3:1 | 2024-10 |