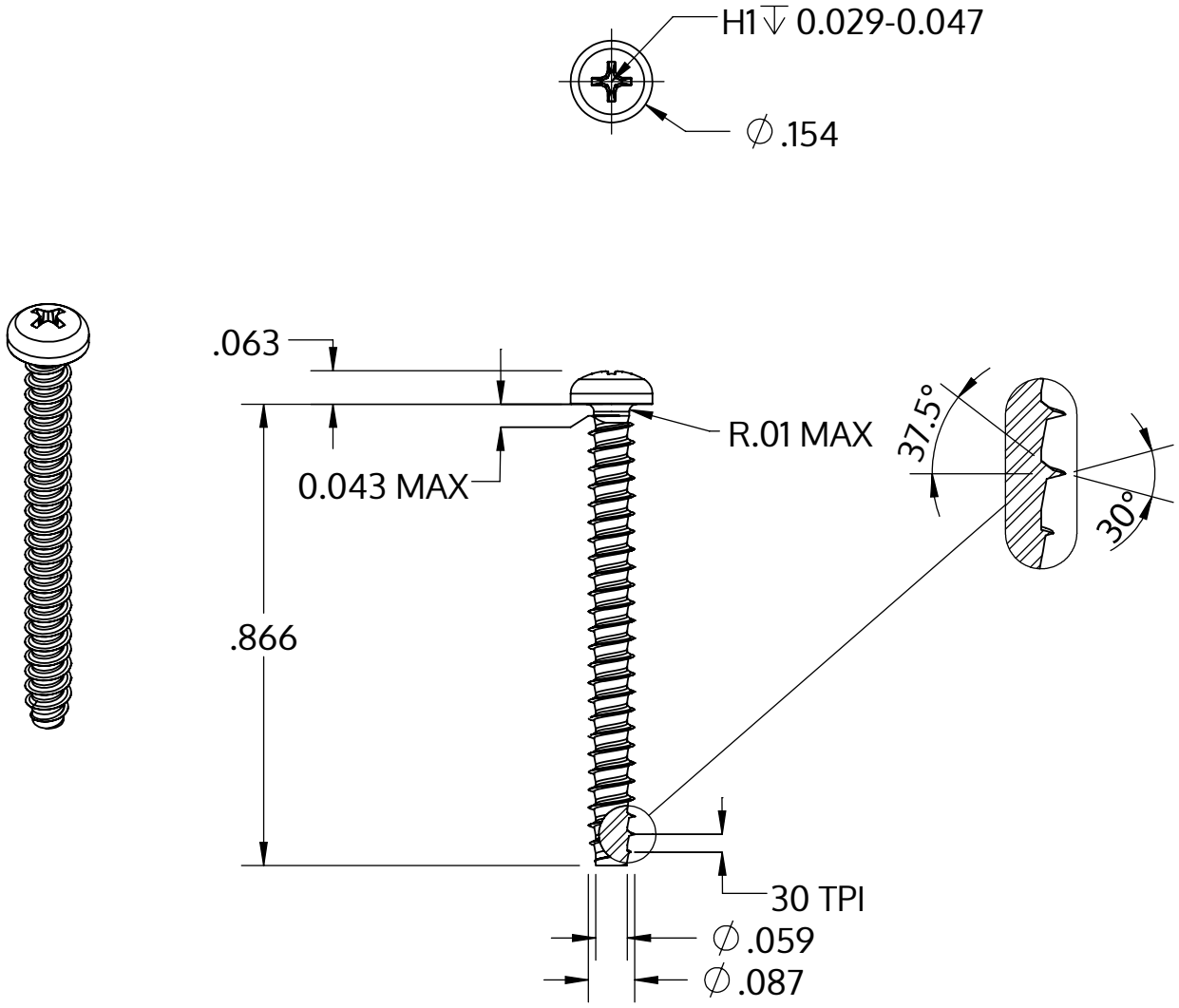

Metric size	M2.2 x 0.85 mm
US size (converted)	#2-30
	Tolerances [inch]
Length	+/- 0.025
Head diameter	+0 / -0.011
Head height	+/- 0.004
Thread diameter	+0.003 / -0

Descriere	STP32 2.2x22.0 - H1
Material	oțel, călit
Exterior	zincat, Nichelat, pasivat negru / nu conține Cr-VI, recopt, ermetizat
Greutate	0.505 kg / 1000 unități

SCREWERK	**STP320220220B**	
_Zoll Zeichnung Größe A	Scalarea 3:1	2024-05