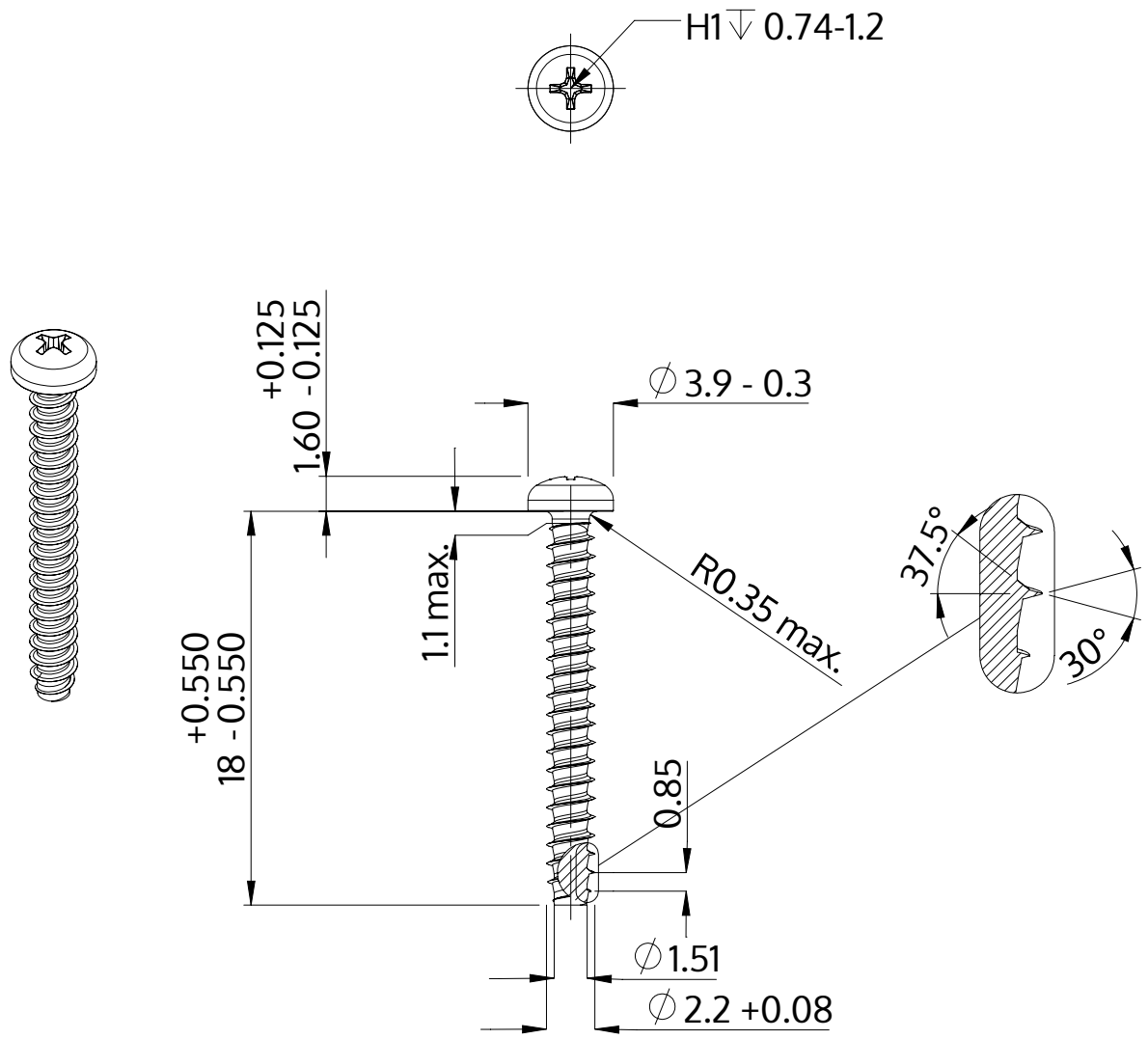

Description	STP32 2.2x18.0 - H1
Material	stainless-steel A2
Surface	bright, pickled and passivated
Weight	0.431 kg / 1000 pieces

SCREWERK	**STP320220180E**	
Metric Drawing A4	Scale None:1	2024-05