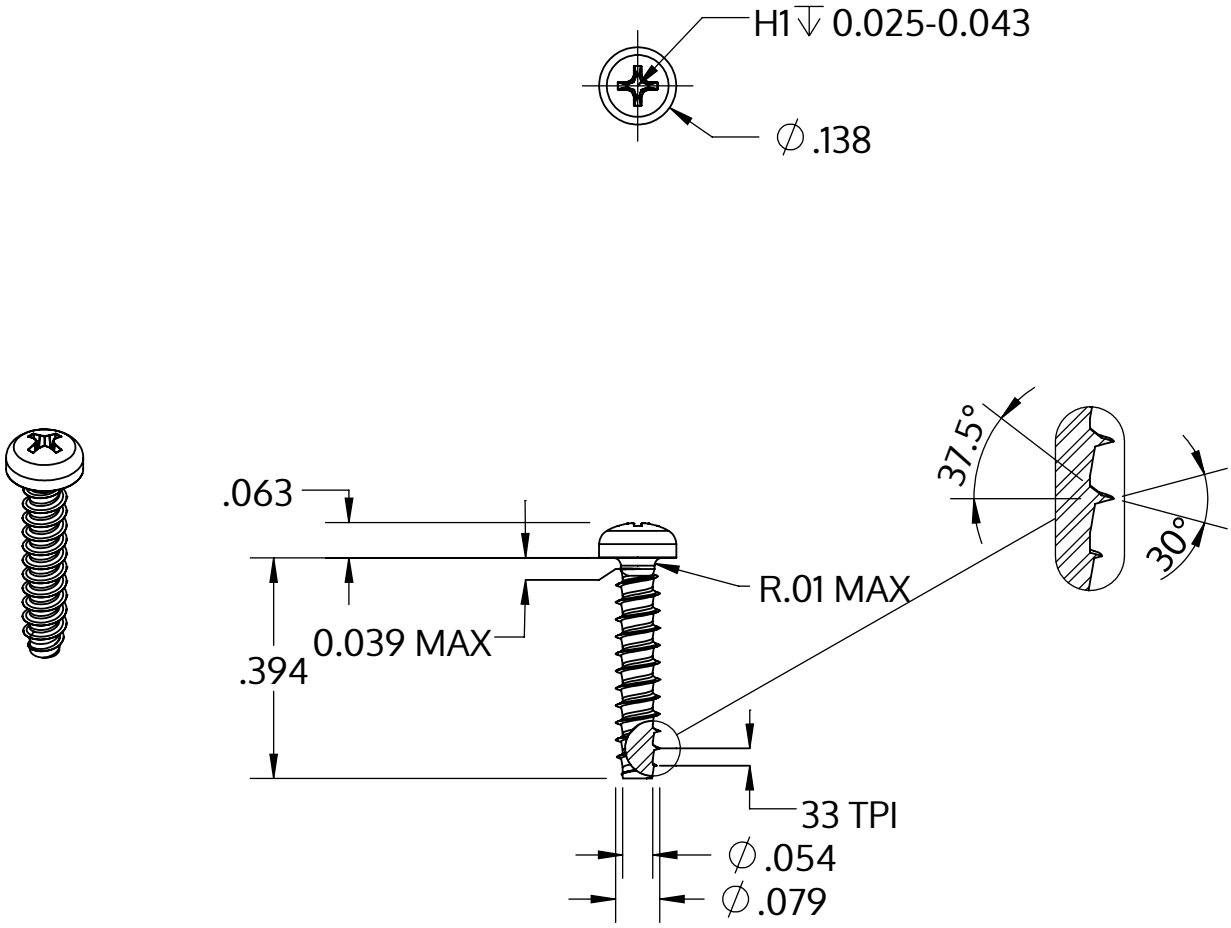

Metric size	M2 x 0.78 mm
US size (converted)	#1.5-33
	Tolerances [inch]
Length	+/- 0.017
Head diameter	+0 / -0.011
Head height	+/- 0.004
Thread diameter	+0.003 / -0

Description	STP32 2.0x10.0 - H1
Matière	acier inoxydable A4
Surface	brillant décapé et passivé
Poids	0.228 kg / 1000 Unité

SCREWERK	**STP320200100C**	
_Zoll Zeichnung Größe A	Redimensionner 3:1	2024-05