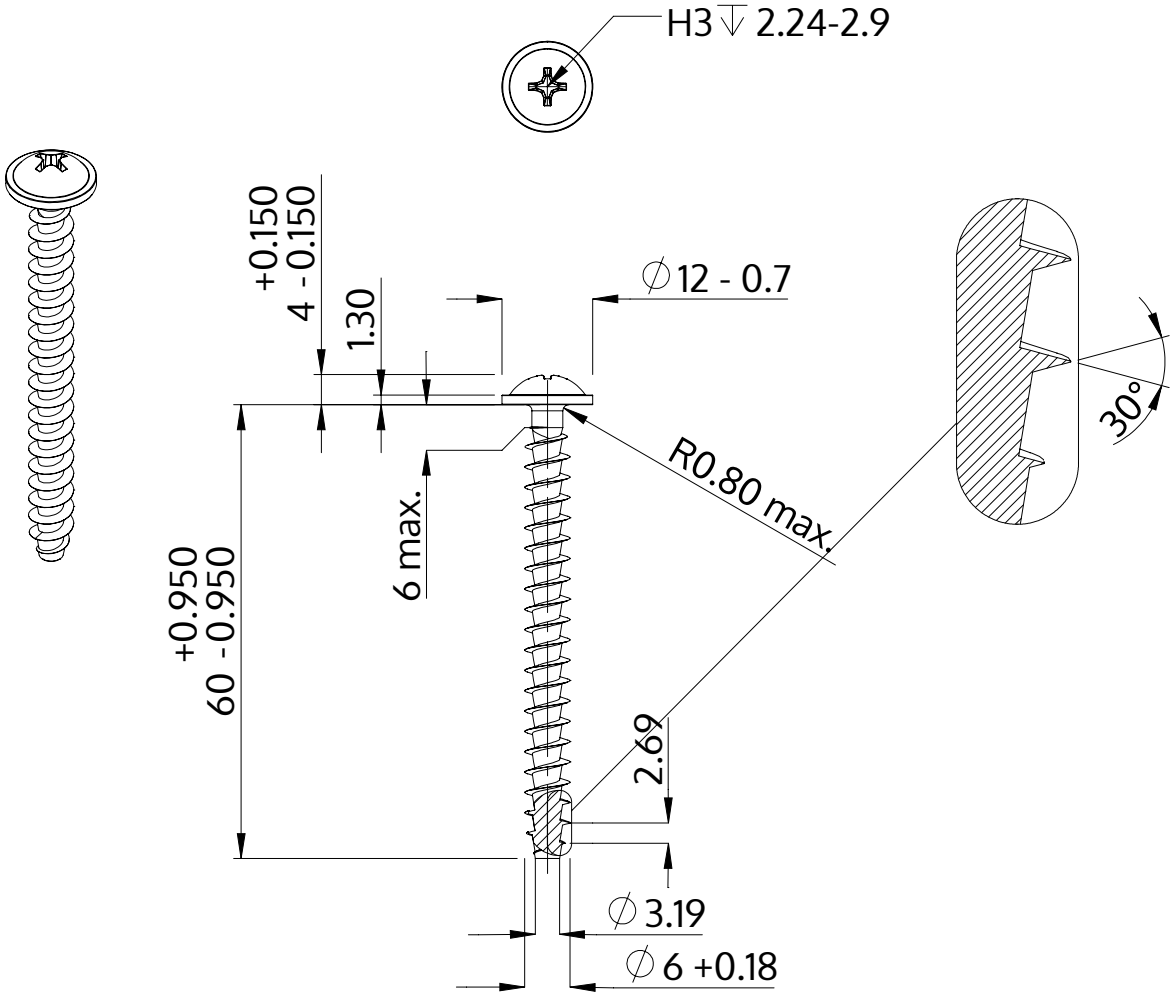

Description	STP31A 6.0x60.0 - H3
Material	steel, hardened
Surface	zinc-plated 5-7 µm, baked, blue / transparent passivated
Weight	7.784 kg / 1000 pieces

SCREWERK	**STP31A0600600S**	
Metric Drawing A4	Scale 1:1	2024-10