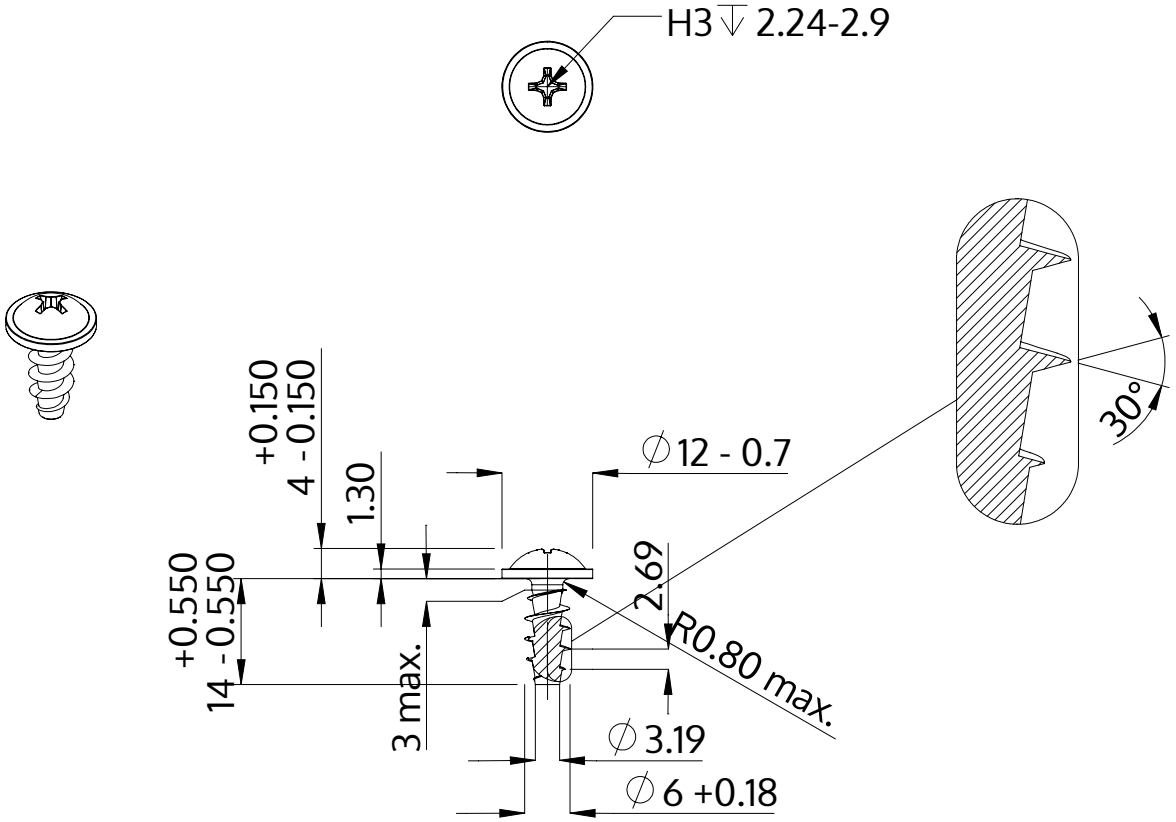

Description	STP31A 6.0x14.0 - H3
Material	stainless-steel A2
Surface	bright, pickled and passivated
Weight	3.087 kg / 1000 pieces

SCREWERK	**STP31A0600140E**	
Metric Drawing A4	Scale None:1	2024-04