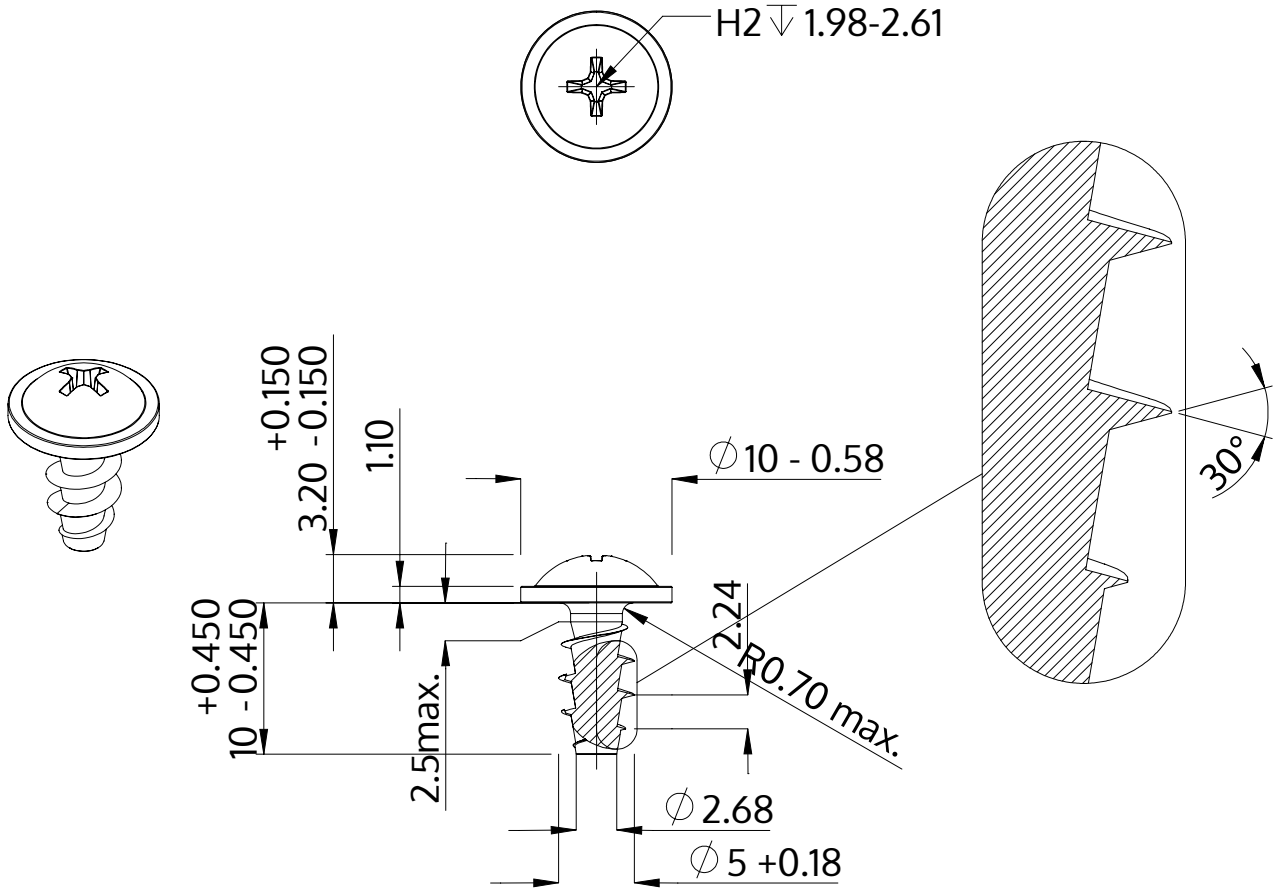

Description	STP31A 5.0x10.0 - H2
Material	stainless-steel A2
Surface	bright, pickled and passivated
Weight	1.745 kg / 1000 pieces

SCREWERK	**STP31A0500100E**	
Metric Drawing A4	Scale 2:1	2024-10