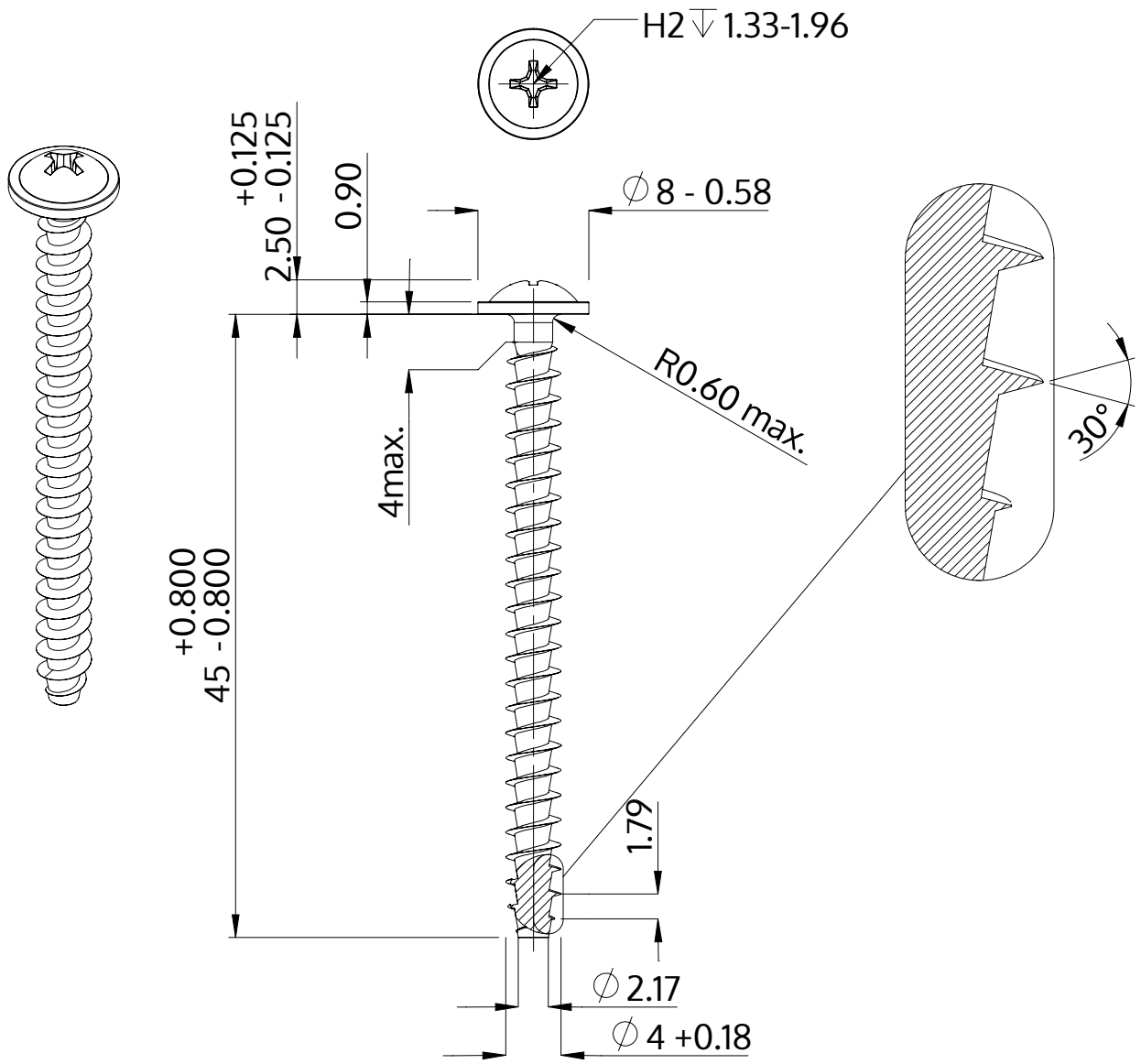

Description	STP31A 4.0x45.0 - H2
Material	steel, hardened
Surface	zinc-plated 5-7 µm, baked, blue / transparent passivated
Weight	2.666 kg / 1000 pieces

SCREWERK	**STP31A0400450S**	
Metric Drawing A4	Scale 2:1	2024-10