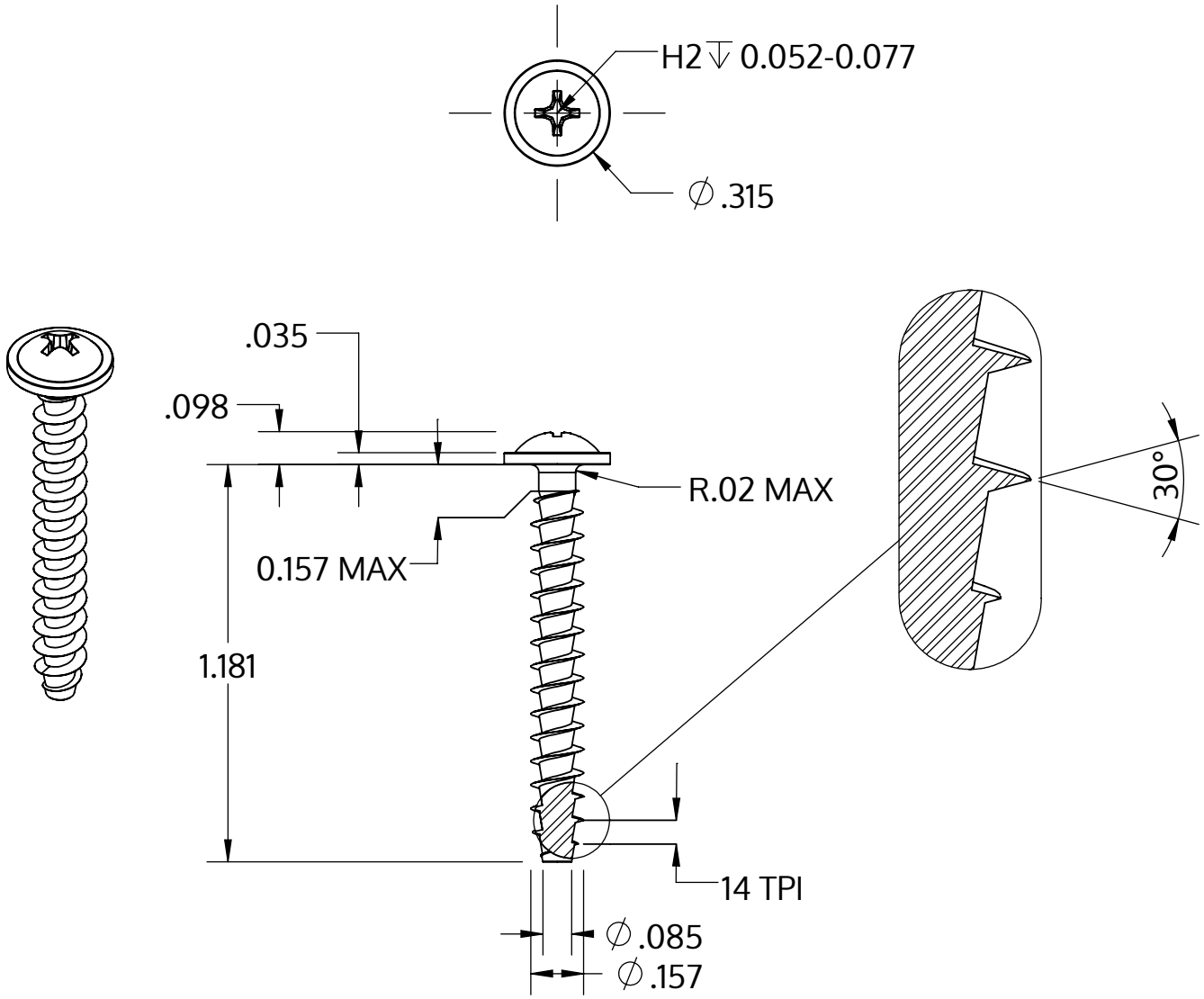

Metric size	M4 x 1.79 mm
US size (converted)	#8-14
	Tolerances [inch]
Length	+/- 0.025
Head diameter	+0 / -0.022
Head height	+/- 0.004
Thread diameter	+0.007 / -0

Descriere	STP31A 4.0x30.0 - H2
Material	oțel, călit
Exterior	zincat, Nichelat, pasivat negru / nu conține Cr-VI, recopt, ermetizat
Greutate	1.942 kg / 1000 unități

SCREWERK	**STP31A0400300B**	
_Zoll Zeichnung Größe A	Scalarea 2:1	2024-10