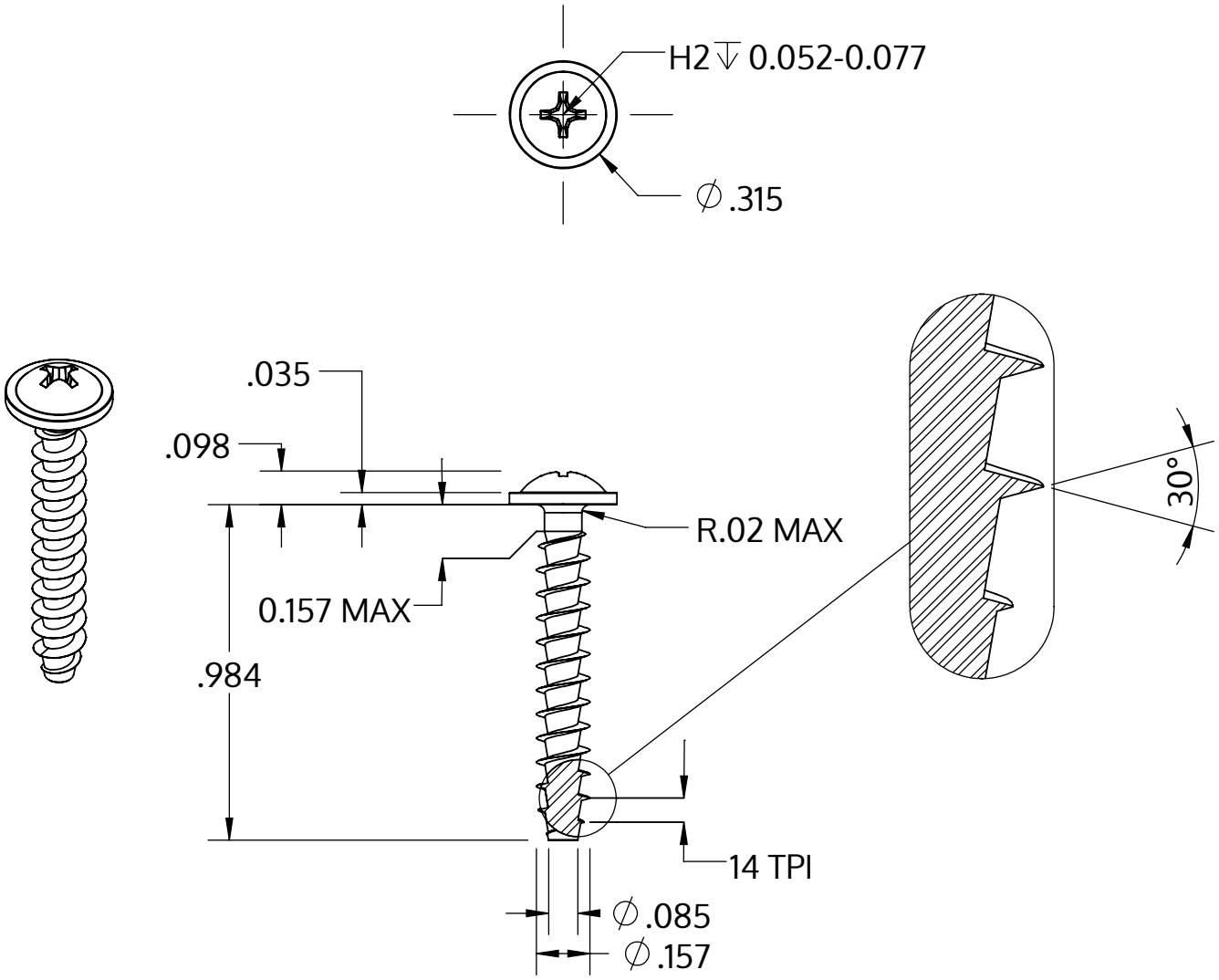


| | |
|---|---|
| Metric size | M4 x 1.79 mm |
| US size (converted) | #8-14 |
| | Tolerances [inch] |
| Length | +/- 0.025 |
| Head diameter | +0 / -0.022 |
| Head height | +/- 0.004 |
| Thread diameter | +0.007 / -0 |

| | |
|---|---|
| Beskrivelse | STP31A 4.0x25.0 - H2 |
| Materiale | Ædelstål A2 |
| Overflade | blank, bejdset og passiveret |
| Vægt | 1.700 kg / 1000 stykke |

| | | |
|---|---|---|
| SCREWERK | **STP31A0400250E** | |
| _Zoll Zeichnung Größe A | Skalering 2:1 | 2024-10 |