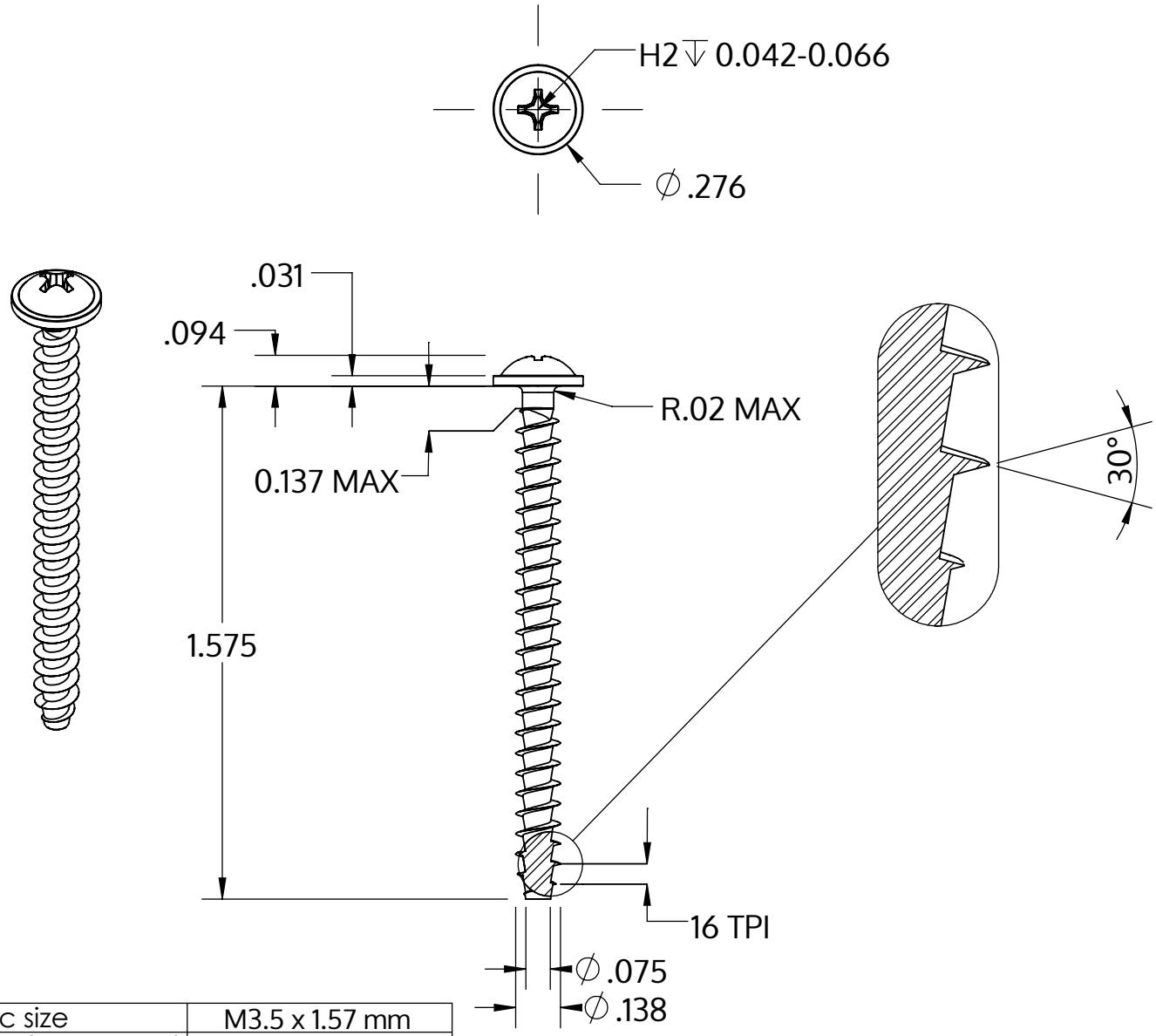

Metric size	M3.5 x 1.57 mm
US size (converted)	#6-16
	Tolerances [inch]
Length	+/- 0.031
Head diameter	+0 / -0.022
Head height	+/- 0.004
Thread diameter	+0.007 / -0

Description	STP31A 3.5x40.0 - H2
Material	stainless-steel A2
Surface	bright, pickled and passivated
Weight	1.878 kg / 1000 pieces

SCREWERK

STP31A0350400E

Inch Drawing Size A	Scale 2:1	2024-10