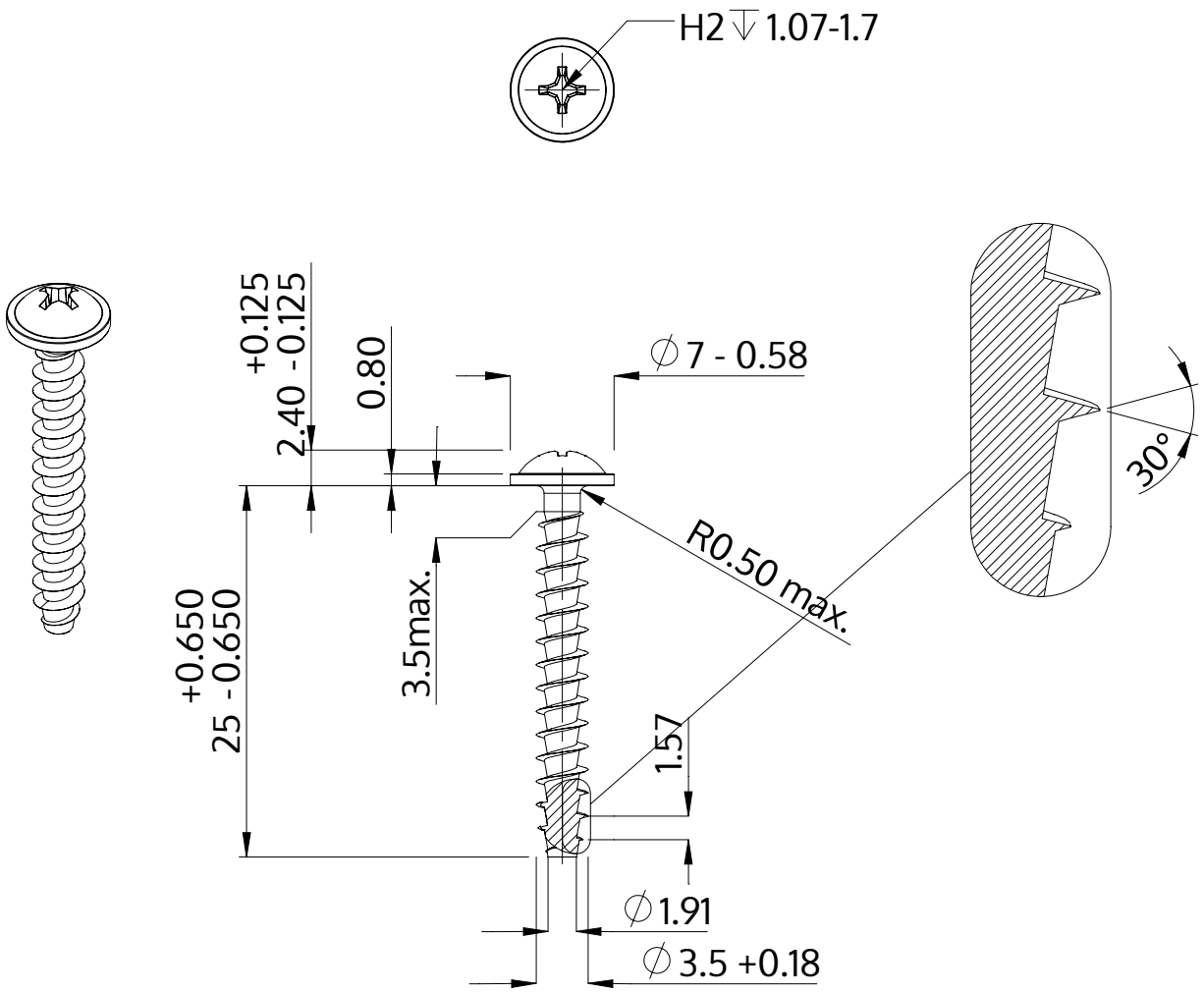

Description	STP31A 3.5x25.0 - H2
Material	stainless-steel A2
Surface	bright, pickled and passivated
Weight	1.329 kg / 1000 pieces

SCREWERK	**STP31A0350250E**	
Metric Drawing A4	Scale 2:1	2024-10