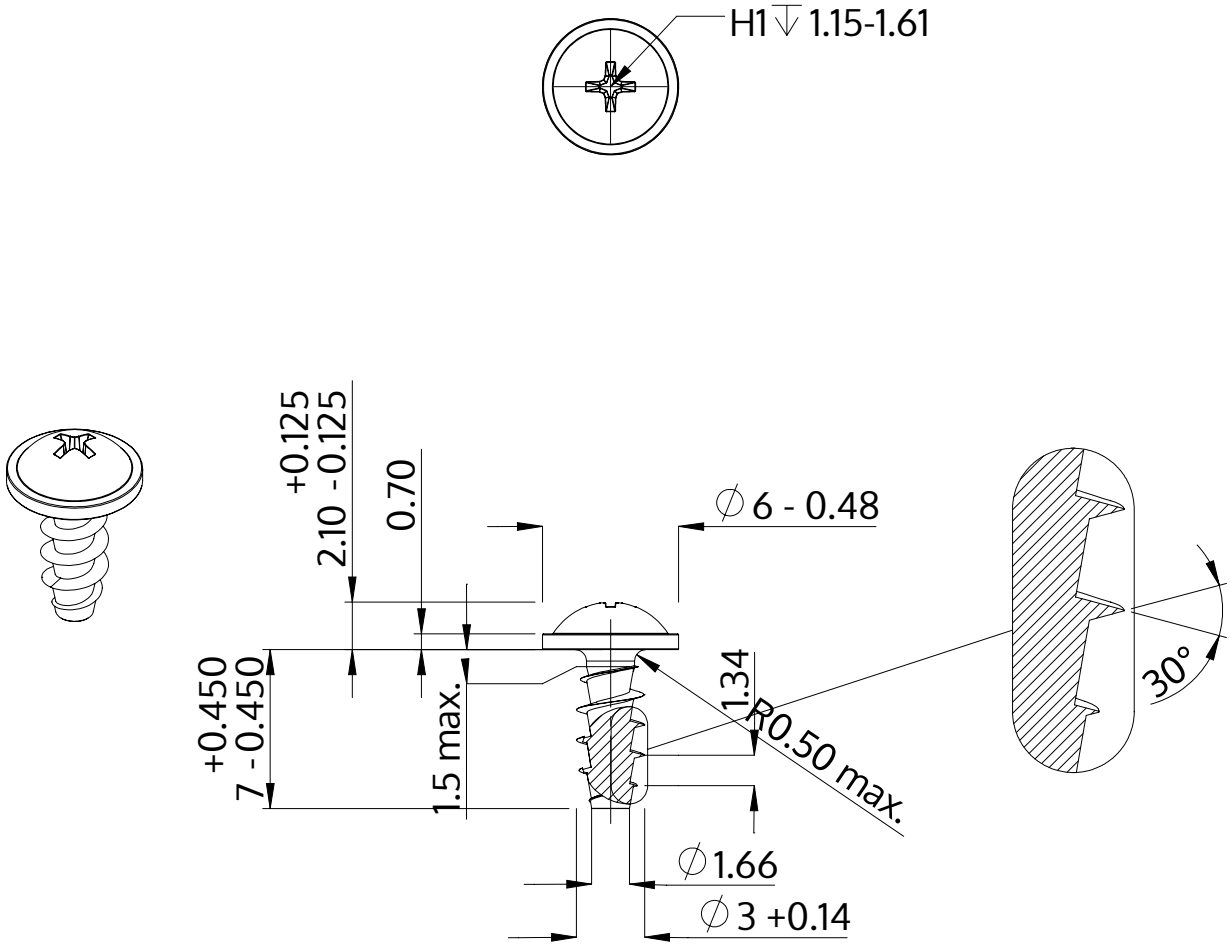

Description	STP31A 3.0x7.0 - H1
Material	steel, hardened
Surface	zinc-plated 5-7 µm, baked, blue / transparent passivated
Weight	0.427 kg / 1000 pieces

SCREWERK	**STP31A0300070S**	
Metric Drawing A4	Scale 3:1	2024-10