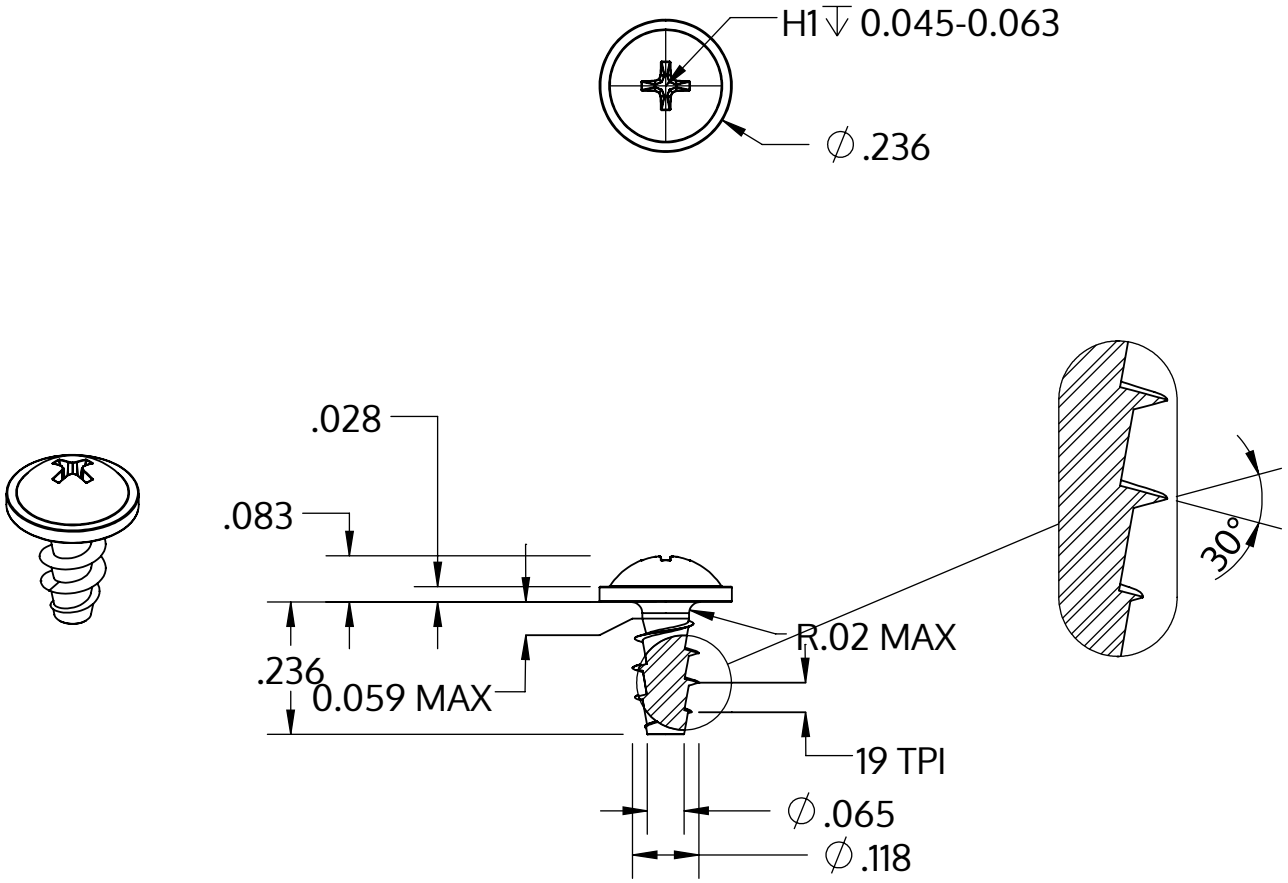

Metric size	M3 x 1.34 mm
US size (converted)	#4-19
	Tolerances [inch]
Length	+/- 0.014
Head diameter	+0 / -0.018
Head height	+/- 0.004
Thread diameter	+0.005 / -0

Descrizione	STP31A 3.0x6.0 - H1
Materiale	acciaio inossidabile A2
Superficie	bianco-decapato e passivato
Peso	0.398 kg / 1000 pezzi

SCREWERK	**STP31A0300060E**	
_Zoll Zeichnung Größe A	Scala 3:1	2024-10