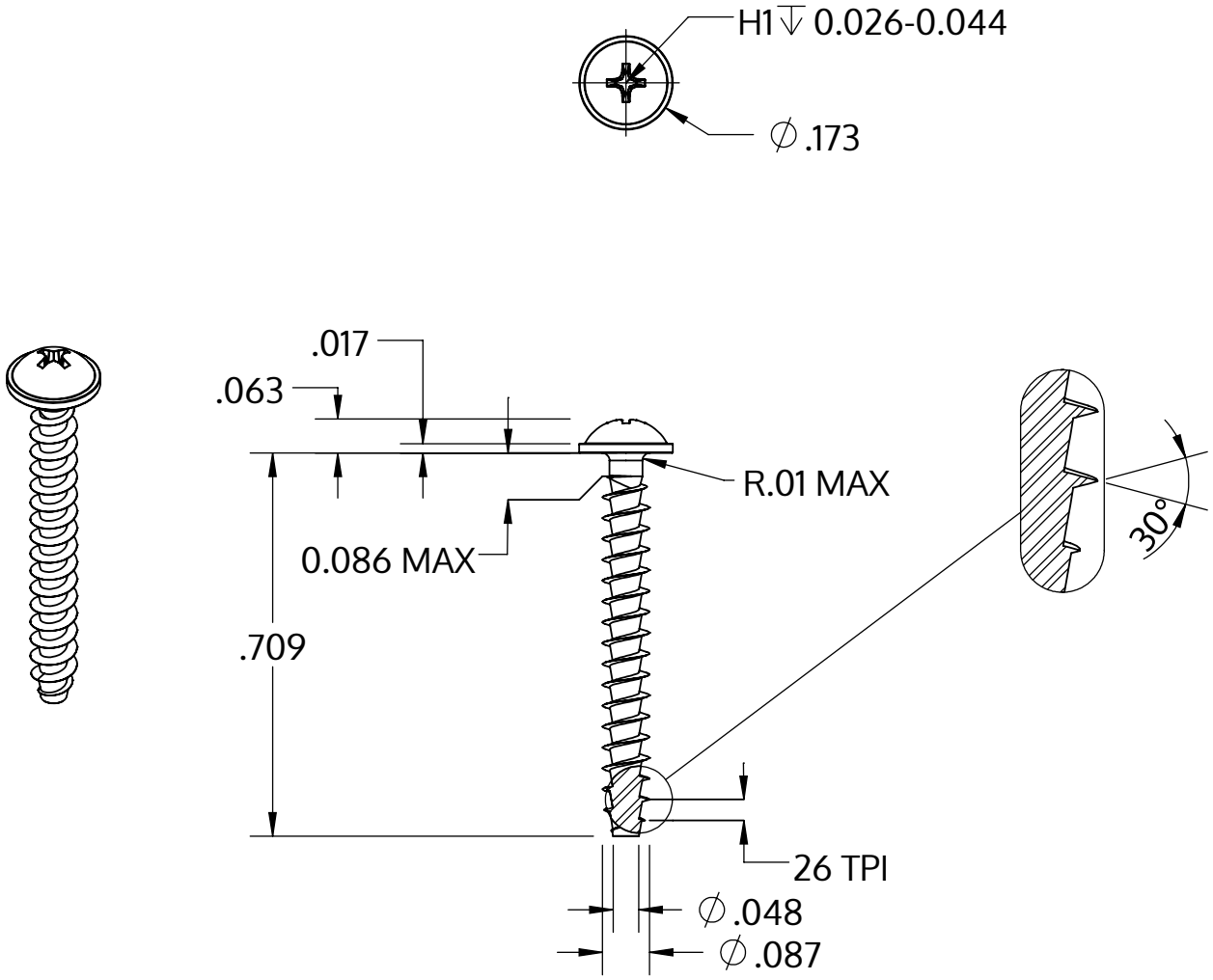

Metric size	M2.2 x 0.98 mm
US size (converted)	#0.086-26
	Tolerances [inch]
Length	+/- 0.021
Head diameter	+0 / -0.018
Head height	+/- 0.004
Thread diameter	+0.005 / -0

Descrizione	STP31A 2.2x18.0 - H1
Materiale	acciaio inossidabile A2
Superficie	bianco-decapato e passivato
Peso	0.391 kg / 1000 pezzi

SCREWERK	**STP31A0220180E**	
_Zoll Zeichnung Größe A	Scala 3:1	2024-10