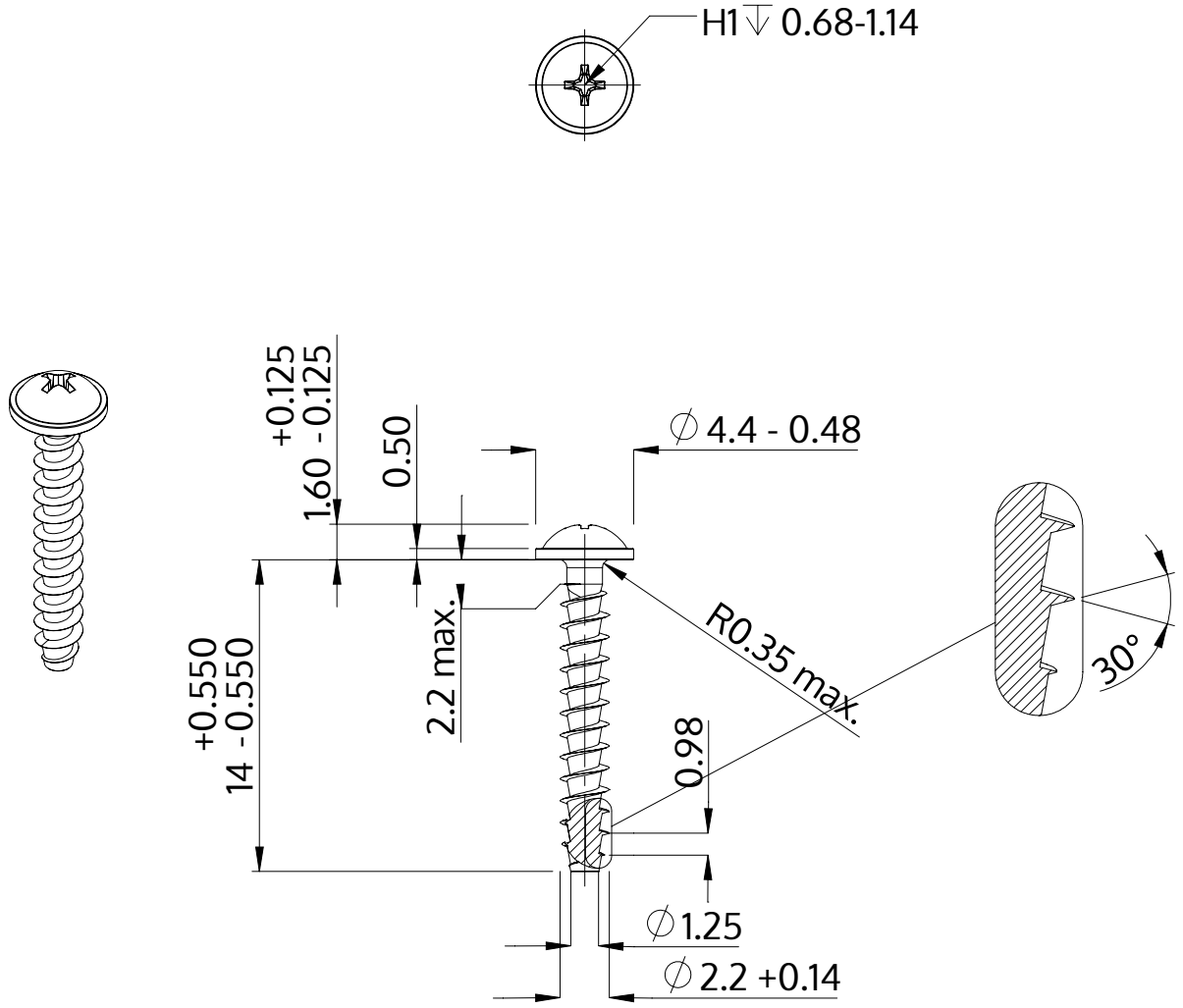

Description	STP31A 2.2x14.0 - H1
Material	stainless-steel A2
Surface	bright, pickled and passivated
Weight	0.328 kg / 1000 pieces

SCREWERK	**STP31A0220140E**	
Metric Drawing A4	Scale None:1	2024-04