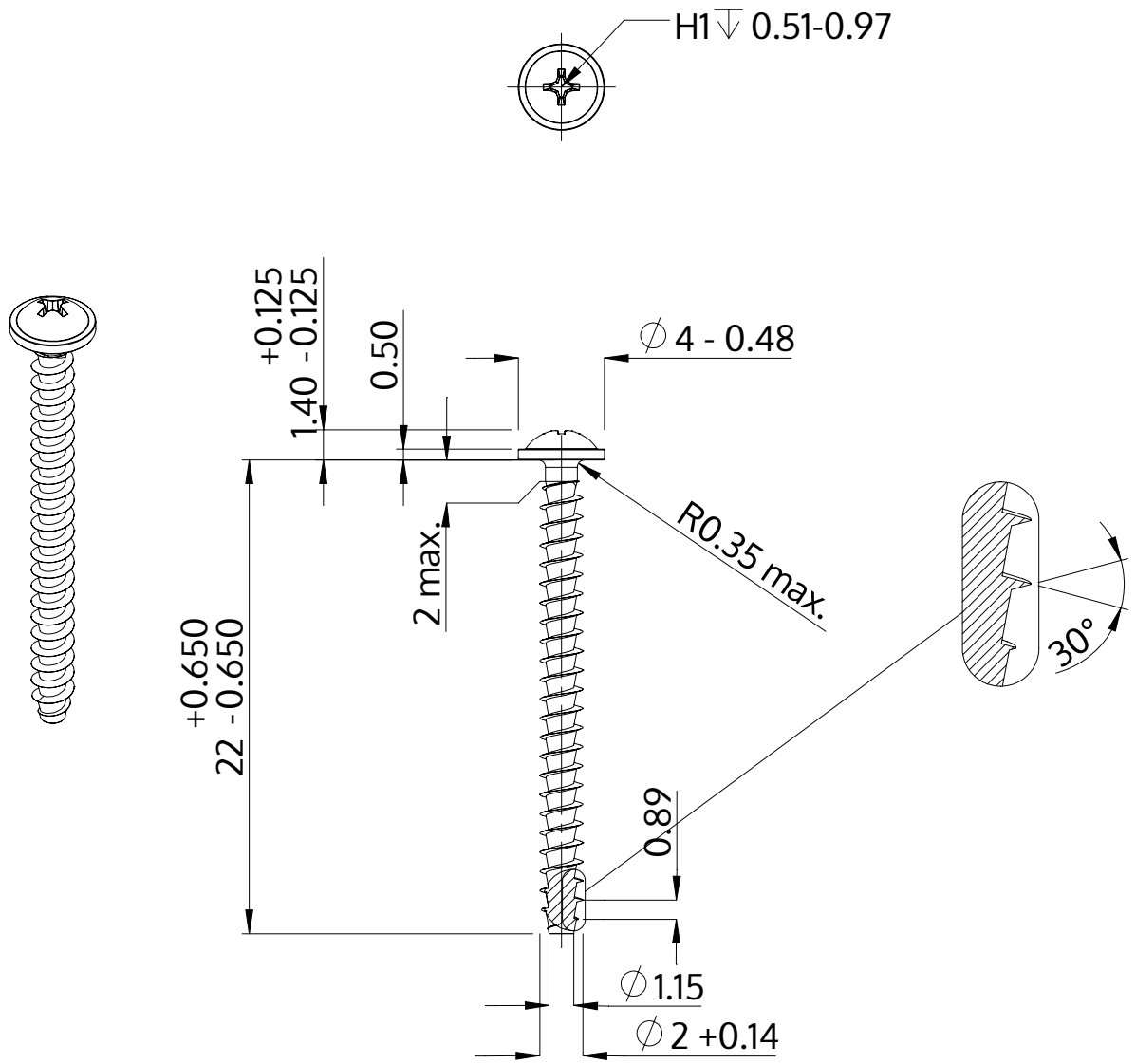

Description	STP31A 2.0x22.0 - H1
Material	steel, hardened
Surface	zinc-plated 5-7 µm, baked, blue / transparent passivated
Weight	0.407 kg / 1000 pieces

SCREWERK	**STP31A0200220S**	
Metric Drawing A4	Scale None:1	2024-04