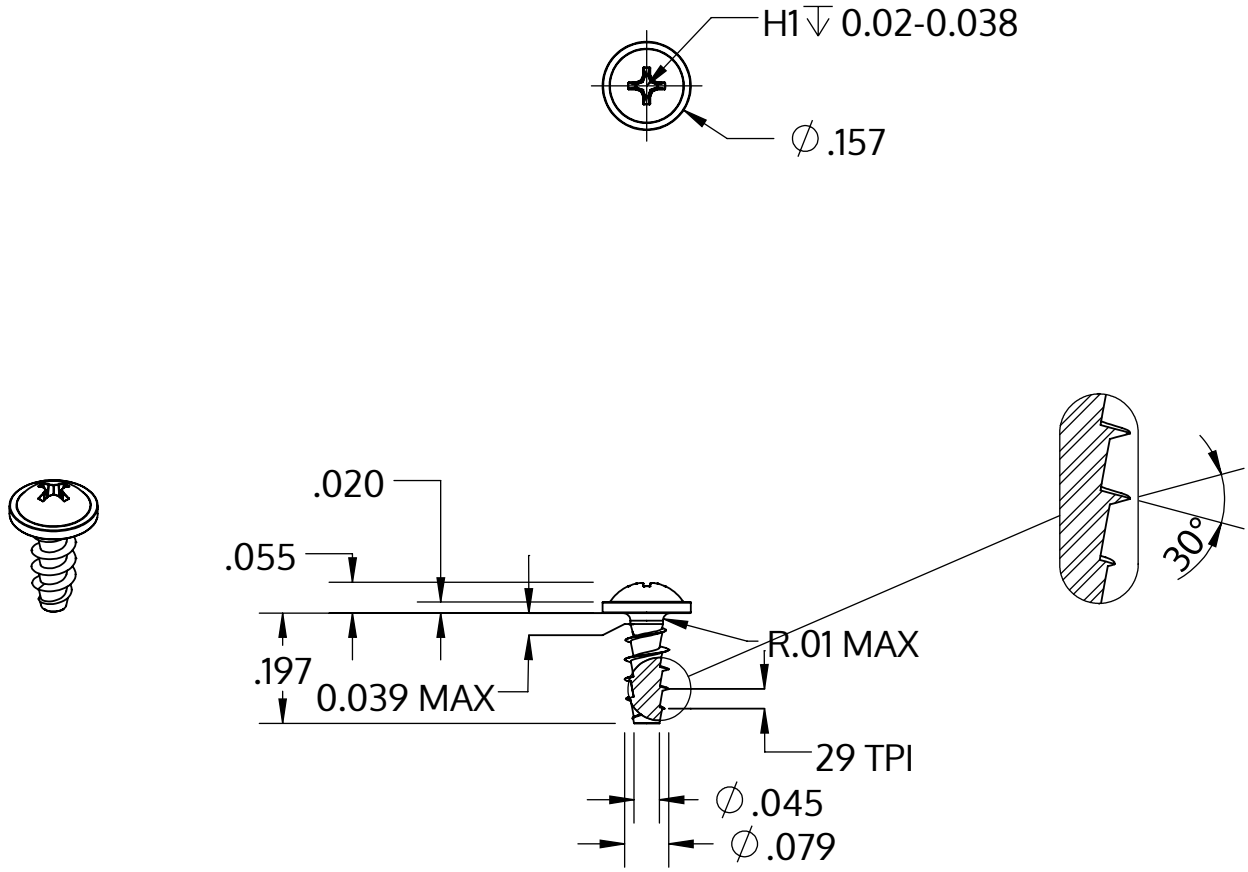

Metric size	M2 x 0.89 mm
US size (converted)	#1.5-29
	Tolerances [inch]
Length	+/- 0.014
Head diameter	+0 / -0.018
Head height	+/- 0.004
Thread diameter	+0.005 / -0

Description	STP31A 2.0x5.0 - H1
Material	steel, hardened
Surface	zinc-plated 5-7 µm, baked, blue / transparent passivated
Weight	0.162 kg / 1000 pieces

SCREWERK	**STP31A0200050S**	
Inch Drawing Size A	Scale 3:1	2024-10